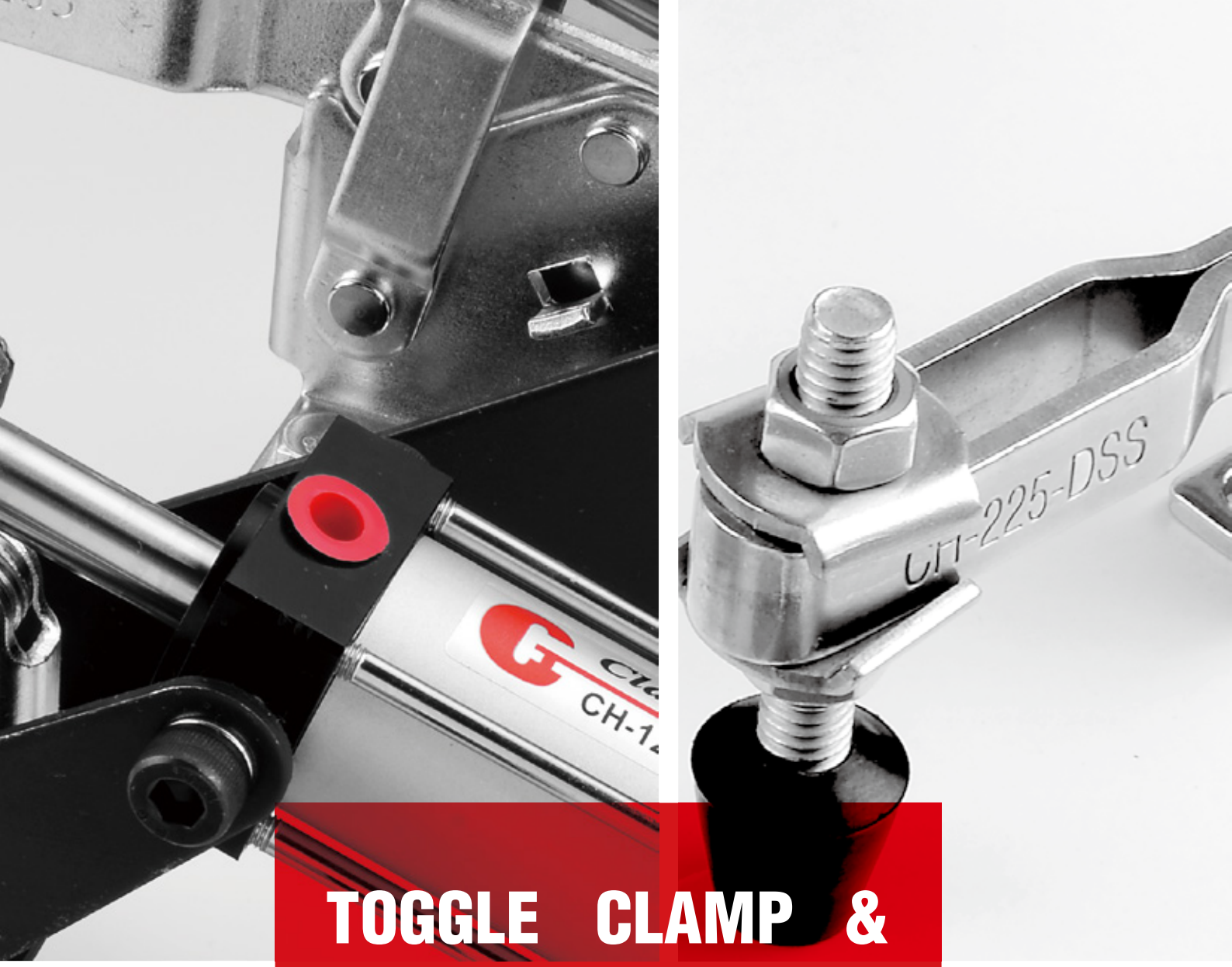

TOGGLE CLAMP & CLAMPING SYSTEM

GRAPAS RÁPIDAS & SISTEMAS DE SUJECIÓN

catalogue 2015-2018

Clamptek®

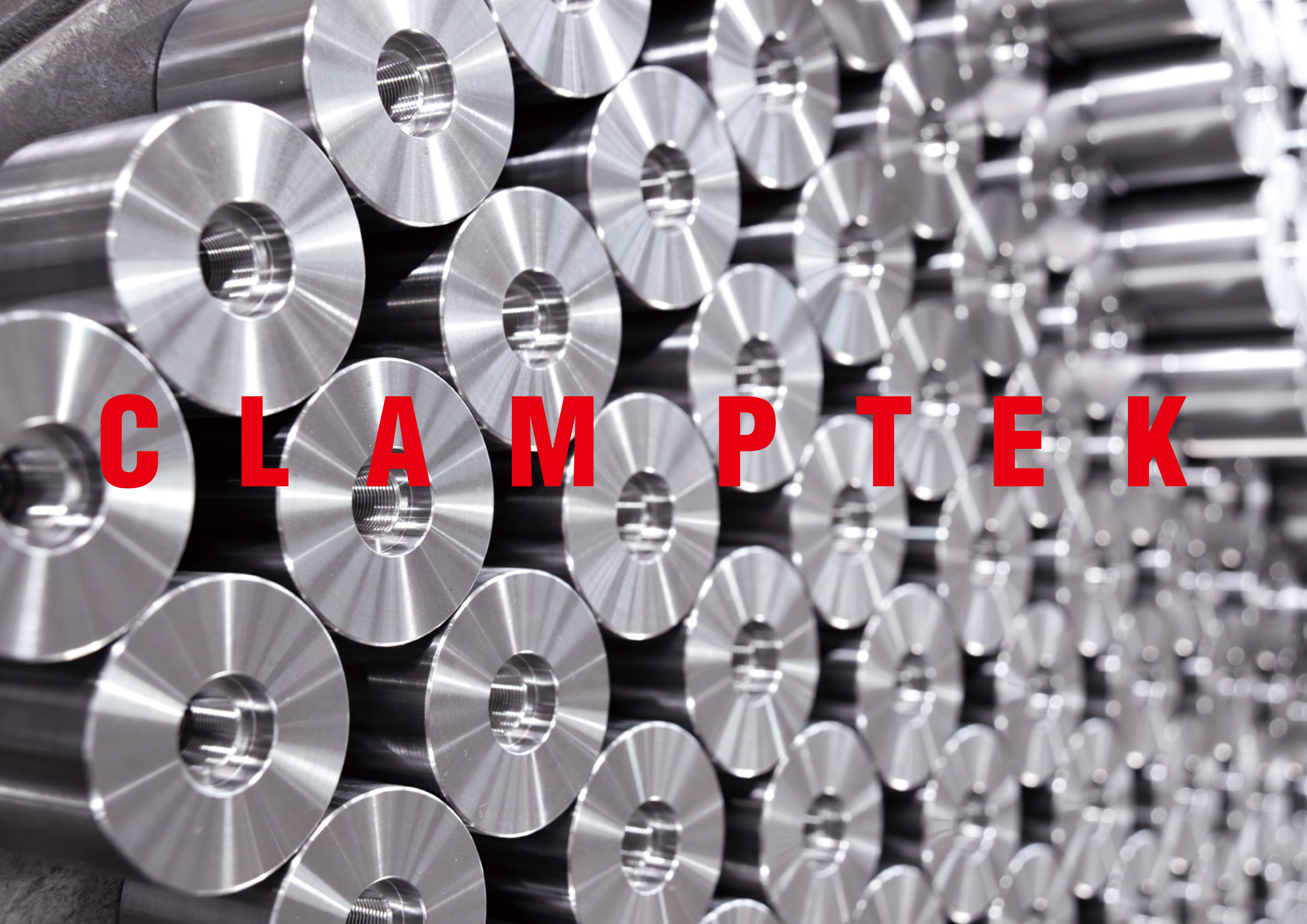

CLAMPTEK

INTRODUCTION

The technical R&D of Clamptek originated in Taiwan where its headquarter is situated. Clamptek has its production base located in Dongguan. Due to its strong power in product development, manufacturing and sales capacity, it has ranked the No.1 in China and among top 10 worldwide in the field of toggle clamps, and gained the brand recognition and trust from clients. With perseverance and industry, Clamptek has made great contribution in the industrial equipment industry.

President Mike Tsung-Che Chiu Wei set up Taiwan CLAMPTEK ENTERPRISE CO., LTD. in 1974 and set up the factory in Houjie Town of Dongguan in 1999, in order to expand the production scale, the factories were transferred to the New Factory Area of Sangyuan Industrial Park of Dongcheng District of Dongguan City in 2013.

Clamptek has developed from the traditional production of manual clamps into the production of precision pneumatic & hydraulic clamping system, precision locknuts, hydraulic power units, precision fixture system, assembled flexible clamps, precision auto clamps and soldering toggle clamps.

Clamptek uses the clamps as the tools for clamping and fixating. It also efficiently organized the system of manual clamps, pneumatic/hydraulic clamps, hydraulic power units and precision fixture all together and to work and meet the client's automatization, fast and precisely clamping needs.

INTRODUCCIÓN

La investigación y el desarrollo de tecnología de CLAMPTEK provienen de Taiwan en donde se ubica la casa matríz de la empresa. En virtud de su desarrollo de productos fuerte y su capacidad de producción y venta, la empresa ha alcanzado ocupar el No.1 de China y los primeros diez de todo el mundo en el ámbito de grapas rápidas(toggle clamp). Los clientes nos dan su confianza y sanción. Todos los trabajadores de CLAMPTEK están haciendo sus esfuerzos a dedicarse a la industría de equipos de China.

CLAMPTEK ENTERPRISE CO., LTD. fue fundado en 1974 por el señor Mike Tsung-Che Chiu Wei en Taiwan. La base de producción de CLAMPTEK está en Dongguan, establecido en 1999. Y con el fin de ampliar la escala de producción, la fábrica se trasladó a la zona de Sangyuan Parque Industrial del distrito de Dongcheng, Dongguan ciudad en 2013.

CLAMPTEK ha desarrollo su ámbito desde la producción de grapas rápidas manuales hacia los productos como: sistema de sujeción neumática & hidráulica de alta precisión, tuerca de bloqueo de alta precisión, estación hidráulica, y tenazas de soldadura.

CLAMPTEK organiza la sujeción manual, sistema sujeción de neumática & hydráulica y sistema de energía hidráulica con el fin de satisfacer los requerimientos de nuestros clientes para las piezas de sujeción rápida con alta presición.

CLAMPTEK PRESIDENT
Mr. Mike TsungChe Chiu Wei

CLAMPTEK'S R&D AND QUALITY MANAGEMENT SYSTEM

CLAMPTEK'S R&D Y SISTEMA COMPLETO ADMINISTRACIÓN DE CALIDAD

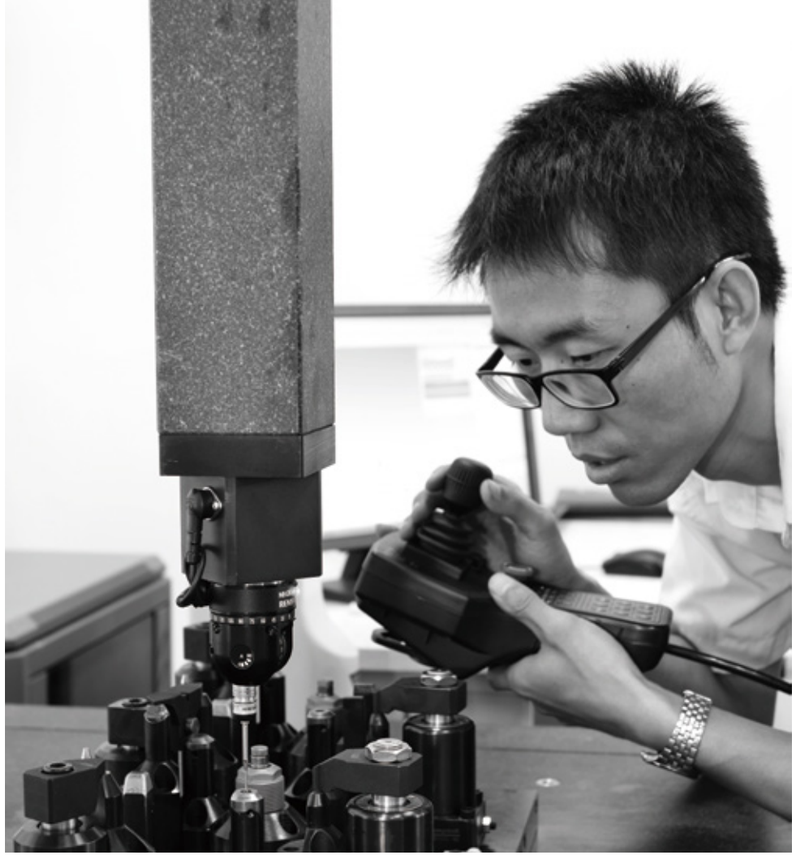

In the aspect of quality, the company has set up a perfected quality management system. Clamptek has gradually set up a complete quality management system which works to perfect the production techniques and procedures and to manufacture eminent products within reasonable costs. Knowing the high quality requirement of clients, Clamptek not only demands the precision and quality in the production process, but reinforced the inspection of half and finished products during production and before shipment.

R&D is the base for further development. Being the pioneering brand in the clamp industry in mainland China, Clamptek devotes great energy to research and development, and the clients' demands has actually led the way for Clamptek. Clamptek not only imported the developed products from abroad, but strives to develop new products with intellectual property right. After years of researches and development, Clamptek has won market recognition and many patents in Europe countries , United States and Japan. In the future, Clamptek will devote more time and energy to R&D, hoping to provide better product options for the market, to bring growing profit for the company, to contribute for the society and to benefit and share with employees.

La empresa ya tiene un sistema completo y perfecto de garantía y administración de calidad, nuestra meta es producir productos de alta calidad mediante buscar constantemente la tecnología de producción y el proceso de fabricación más eficientes y más válidos; Clamptek sabe que los requerimientos de clientes son altos y detallados, entonces además de exigir la presición y la calidad de nuestra producción, también tomamos mucha atención a las detecciones realizadas a nuestros productos semilaborados y terminados.

CLAMPTEK, como la marca líder de grapas rápidas (toggle clamps) de China, sigue dedicando a la investigación y el desarrollo con el fin de satisfacer todos los requerimientos de nuestros clientes. Persiguimos el desarrollo independiente para lograr el derecho de propiedad intelectual independiente, en realidad, lo hemos logrado gracias a los trabajos realizados por nuestro equipo de investigación, rompío el monopolio anterior de productos de alta tecnología por países Europeos, Americanos y Japón, etc. En el futuro, CLAMPTEK seguirá investiendo más recursos para la investigación y el desarrollo para que sea la opción mejor de la industría. Hacemos todos esfuerzos para ser el proveedor más avanzado de grapas y realizar nuestro objetivo: Número 1 de China y Top 10 de todo el mundo.

THREE MAJOR BUSINESS FIELDS OF CLAMPTEK

LOS TRES ÁREAS DE NEGOCIO DE CLAMPTEK

CLAMPING SYSTEM SISTEMAS DE SUJECIÓN

1	Toggle clamps	Grapas rápidas
	Hydraulic clamping system	Sistema de sujeción hidráulica
	Pneumatic clamping system	Sistema de sujeción neumática

PRECISION NON-STANDARD EQUIPMENTS EQUIPOS ESPECIFICO DE PRESICIÓN

2	Hydraulic power unit	Estación hidráulica
	Precision machinery fixture system	Sistema de presicion máquina para sujeto

AGENT OF HI-TECH PRECISION PRODUCTS
AGENTE GENERAL DE PRODUCTOS DE ALTA TECNOLOGÍA

3	Precision lock nut of YINSH (Taiwan)	Tuercas de presición de YINSH de Taiwan
	Precision bearing of TPI (Taiwan)	Rodamientos de presición de TPI de Taiwan

COMPARISON TABLE
(ENGLISH-SPANISH)

TABLA COMPARATIVA
(INGLÉS-ESPAÑOL)

Model	Modelo
Weight	Peso
Holding Capacity	Fuerza de sujeción
Spindle Supplied	Modelo de tornillo de cabeza
Bar opens	Ángulo de apertura de la barra
Handle Opens	Ángulo de apertura del brazo
U-Bar	Barra en U
(Long) Solid Bar	Barra sólida (larga)
(Short) Solid Bar	Barra sólida (corta)
Open Bar	Barra de boca abierta
High Bar	Barra alta
Low Bar	Barra baja
Flanged Base	Base de brida
Straight Base	Base recta
Left Hand Flanged Base	Base de brida izquierda
Right Hand Flanged Base	Base de brida derecha
Straight Handle	Brazo recto
T-Handle	Brazo en T
Side Mounted	Instalación de la brida lateral
Plunger Stroke	Carrera
Fixed Spindle	Huso fijado
Stainless Steel	Acero inoxidable
Cylinder Bore	Diámetro del cilindro
Cylinder Area	Área del cilindro
Maximum Cylinder Air Pressure	Presión máxima del cilindro
Maximum Holding Capacity	Fuerza de sujeción máxima
Clamping stroke	Carrera en condición sujetado
Total stroke	Carrera total
Oil/cylinder capacity clamp	Capacidad de cilindro en condición sujetado
Oil/cylingder capacity unclamp	Capacidad de cilindro en condición abierto
eff.piston area clamp	Área de efectividad del pistón en condición sujetado
eff.piston area unclamp	Área de efectividad del pistón en condición abierto
Range of temperature(°C)	Alcance de temperatura utilizado(°C)
Clamping arm mounting methods	Métodos de montaje del brazo de sujeción
Clamping arm removing methods	Métodos de eliminación del brazo de sujeción
Hydraulic cylinder insider diameter	Cilindro hidráulico diámetro interno
Cylinder insider diameter	Diámetro interno del cilindro
Piston rod diameter	Diámetro de la biela del pistón
Body external diameter	Diámetro externo del cuerpo
Port type	Tipo de puerto
Line type	Tipo de línea
Manifold type	Tipo colector
Manifold with flow control	Colector con control de flujo
Flange type	Tipo de brida
Threaded body	Cuerpo roscado
Flangle with manifold	Brida con colector
Flange with flow control	Brida con control de flujo
Stroke extension	Carrera de extensión
Sensor switch	Interruptor de sensor
With magnetic induction	Con inducción magnética
Sprint extended piston	Pistón de velocidad extendida
Hydraulic extended piston	Pistón hidráulica extendida
Clamping arm type	Tipo brazo de sujeción
Single side arm	Brazo lateral individual
Double side arm	Brazo lateral doble

PRODUCTS CATEGORY
CATEGORÍA DE PRODUCTOS

18
Vertical toggle clamps
Grapas rápidas vertical

32
Horizontal toggle clamps
Grapas rápidas horizontal

46
Push-pull clamps
Grapas rápidas de apriete y tracción

60
Latch type clamps
Grapas rápidas gancho

68
Toggle pliers
pinzas

78
Heavy duty weldables
Grapas rápidas vertical modelo soldadura

85
F clamps
Apretador en tipo F

86
C clamps
Apretador en tipo C

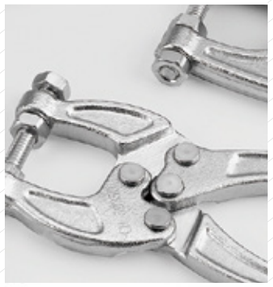

87
Pneumatic toggle clamps
Grapas rápidas neumática

94
Pneumatic clamping system
Sistema de sujeción neumática

108
Hydraulic clamping system
Sistema de sujeción hidráulico

135
Hydraulic valve
Válvula hidráulica

INDEX INDICE

Model No.	Page	Model No.	Page	Model No.	Page	Model No.	Page	Model No.	Page
CH-10101-A	87	CH-11002-B	25	CH-12148	22	CH-200-WLH	44	CH-21800	40
CH-101-A(SS)	21	CH-11401	27	CH-12205	21	CH-201(SS)	33	CH-22005	40
CH-101-AI	21	CH-11412	28	CH-12210	21	CH-20100	41	CH-22010	40
CH-101-AIT	21	CH-11421(SS)	28	CH-12215	21	CH-201-A(SS)	33	CH-22015	40
CH-101-AT	21	CH-11501-B	25	CH-12220	21	CH-201-AI	33	CH-22020	40
CH-101-B	26	CH-11501-C	25	CH-12265(SS)	23	CH-201-AL	33	CH-22025	40
CH-101-D	27	CH-11502-B	25	CH-12265-A	87	CH-201-AR	33	CH-22030	40
CH-101-D-15	27	CH-11502-C	25	CH-12270	23	CH-201-B(SS)	33	CH-22035	40
CH-101-DI	27	CH-12002-B	25	CH-12275	23	CH-201-BHB	34	CH-22040	40
CH-101-DI-15	27	CH-12050(SS)	20	CH-12275-A	87	CH-201-BI	33	CH-220-WH	44
CH-101-DL	27	CH-12050-A	87	CH-12280	23	CH-201-BS	33	CH-220-WLH	44
CH-101-E	27	CH-12050-HB	20	CH-12285	23	CH-201-BSI	33	CH-22100	35
CH-101-E-20	27	CH-12050-SM	20	CH-12290	23	CH-201-BSM	34	CH-22105	35
CH-101-ED	27	CH-12050-U(SS)	20	CH-12295	23	CH-201-C	38	CH-22110	35
CH-101-EI	27	CH-12050-UA	87	CH-12300	23	CH-201-I	33	CH-22115	35
CH-101-EI-20	27	CH-12055	20	CH-12305	23	CH-201-L	33	CH-22165	36
CH-101-EID	27	CH-12055-U	20	CH-12310	23	CH-201-R	33	CH-22170	36
CH-101-EIU	27	CH-12060	20	CH-12315	23	CH-20235(SS)	37	CH-22175	36
CH-101-EL	30	CH-12065	20	CH-12320	23	CH-20236	37	CH-22180	36
CH-101-EU	27	CH-12070	20	CH-12401	27	CH-202-F	38	CH-22185	36
CH-101-H	30	CH-12075	20	CH-12412	28	CH-202-FL	38	CH-22190	36
CH-101-J	24	CH-12080	20	CH-12421	28	CH-20300	35	CH-22195	36
CH-101-JS	24	CH-12085	20	CH-12501-B	25	CH-203-F(SS)	38	CH-22200	36
CH-101-JSB	24	CH-12130(SS)	22	CH-12501-C	25	CH-203-FL	38	CH-22235	36
CH-101-JSI	24	CH-12130-A	87	CH-12502-B	25	CH-203-P	38	CH-22240	36
CH-101-K	29	CH-12130-HB	22	CH-12502-C	25	CH-20400	41	CH-22245	36
CH-101-KF	29	CH-12130-SM	22	CH-13002-B	25	CH-20448	44	CH-22250	36
CH-101-KI	29	CH-12131	22	CH-13005(SS)	19	CH-204-G	39	CH-22382	42
CH-101-KS	29	CH-12132	22	CH-13005-HB	19	CH-204-GB	39	CH-22384	42
CH-10247	24	CH-12132-A	87	CH-13005-SM	19	CH-204-GBL	39	CH-22502-B	37
CH-10247-A	87	CH-12133	22	CH-13007(SS)	19	CH-204-GBLH	39	CH-225-D(SS)	33
CH-10248	24	CH-12135	22	CH-13007-SM	19	CH-204-GL	39	CH-225-DHB(SS)	34
CH-10249	24	CH-12136	22	CH-13008	19	CH-20752-B(SS)	37	CH-225-DI	33
CH-10249-A	87	CH-12137	22	CH-13009	26	CH-20800(SS)	40	CH-225-DSM	34
CH-10250	24	CH-12138	22	CH-13412	28	CH-20820	35	CH-2300	41
CH-102-B(SS)	26	CH-12140	22	CH-13501-B	25	CH-20820-A	88	CH-2301-B	41
CH-10444	29	CH-12141	22	CH-13502-B	25	CH-20830-A	88	CH-23502-B	37
CH-10448-Z	29	CH-12142	22	CH-14009	26	CH-21382 (SS)	42	CH-24502-B	37
CH-10448-ZH	29	CH-12143	22	CH-14412	28	CH-21383	43	CH-2500	41
CH-10648	29	CH-12145	22	CH-200-W	44	CH-21384	42	CH-2501-B	41
CH-10751-B	25	CH-12146	22	CH-200-WH	44	CH-21385	43	CH-25382	42
CH-10752-B	25	CH-12147	22	CH-200-WL	44	CH-21502-B(SS)	37	CH-25383	43

Model No.	Page	Model No.	Page	Model No.	Page	Model No.	Page	Model No.	Page
CH-2600	41	CH-31200	53	CH-40580	64	CH-70200A	83	CH-75048	80
CH-2601-B	41	CH-31200HL	55	CH-40702(SS)	63	CH-70200B	83	CH-75078	80
CH-26382	42	CH-31200HL-A	90	CH-40820	62	CH-70201	84	CH-75088	80
CH-301-AM(SS)	47	CH-31200PR	55	CH-40840	62	CH-70203	84	CH-80070	85
CH-301-BM	47	CH-31200PR-A	90	CH-40870	62	CH-702-C	84	CH-80325(SS)	85
CH-301-CL	47	CH-31501	58	CH-431(SS)	61	CH-702-CA	88	CH-80379(SS)	85
CH-301-CR	47	CH-32500	53	CH-43101	62	CH-702-D	84	Shallow Throat M25~M300	86
CH-30250	50	CH-32500HL	55	CH-43110	66	CH-702-DA	88	Deep Throat M50~M150	86
CH-30282M	57	CH-32500HL-A	90	CH-43120	66	CH-702-K	84	CALC	96
CH-30290M	57	CH-32500PR	55	CH-43150	66	CH-702-KA	88	CAS	97-100
CH-30292M	57	CH-32500PR-A	90	CH-43160	66	CH-70300-T	81	CFCV	136
CH-302-DM(SS)	57	CH-35000	53	CH-43810(SS)	63	CH-70300B	81	CHLC	111-112
CH-302-FM(SS)	47	CH-35000HL	55	CH-451(SS)	63	CH-70305	79	CHS	114-118
CH-303-EM	58	CH-36003-A	89	CH-452(SS)	63	CH-70310	79	CHTB	123-126
CH-303-EMK	58	CH-36003M	48	CH-50350	69	CH-70315	79	CLF5H	109
CH-30450	50	CH-36006	56	CH-50350-1	69	CH-70320	81	CLKA	110
CH-304-CM	51	CH-36010M	48	CH-50360	69	CH-70505	79	CPLCU	95
CH-304-EM(SS)	51	CH-36012M	48	CH-50380	70	CH-70510	79	CPRV	136
CH-304-EML	52	CH-36020	57	CH-50385	71	CH-70515	79	CSF	131-132
CH-304-HM	51	CH-36020-K	57	CH-50450	70	CH-70605	79	CSP	129-130
CH-304-HMY	52	CH-36060	56	CH-50480	70	CH-70610	79	CSV	135
CH-30509M	54	CH-36070	56	CH-51000	71	CH-70615	79	CSW	106
CH-30510M	53	CH-36092M(SS)	48	CH-51010	72	CH-70710	82	CTC	128
CH-30511M	53	CH-36202M(SS)	50	CH-51020	72	CH-70715	82	HB	133
CH-30513	58	CH-36204M(SS)	50	CH-51030	72	CH-70720	81	HBC	127
CH-30519M	54	CH-36224M(SS)	50	CH-51100	73	CH-70725	81	LHC01	113
CH-305-BM	51	CH-36301-A	89	CH-51105	73	CH-70730A	83	NAU	102
CH-305-CM	51	CH-36330-A	89	CH-51106	74	CH-70730B	83	NHS/NHTS	119-120
CH-305-CMT	52	CH-36330M	49	CH-51108	74	CH-71210	82	NHSU	122
CH-305-EA	89	CH-36330ML	49	CH-51109	74	CH-71215	82	NHU	121
CH-305-EM	51	CH-40200	62	CH-51111	75	CH-71220	81	NPSU	103
CH-305-HM	51	CH-40323(SS)	61	CH-51150	73	CH-71225	81	PB	104
CH-305-HMY	52	CH-40324(SS)	61	CH-51151	73	CH-71230A	83	PSB	105
CH-30600	53	CH-40334(SS)	61	CH-51152	73	CH-71230B	83		
CH-30600HL	55	CH-40341(SS)	61	CH-511SP	75	CH-72410	82		
CH-30600HL-A	90	CH-40344(SS)	61	CH-60130	75	CH-72415	82		
CH-30600PR	55	CH-40370	64	CH-60131	75	CH-72420	81		
CH-30600PR-A	90	CH-40370-LP	64	CH-70101	84	CH-72425	81		
CH-30607M	49	CH-40371	63	CH-70103	84	CH-72430A	83		
CH-30608M	49	CH-40380 SS)	64	CH-701-C	84	CH-72430B	83		
CH-30609M	54	CH-40402(SS)	63	CH-701-D	84	CH-75027	80		
CH-30619M	54	CH-40550	64	CH-701-K	84	CH-75027-SM	80		

VERTICAL TOGGLE CLAMPS

GRAPAS RÁPIDAS VERTICAL

CH-13005-SS

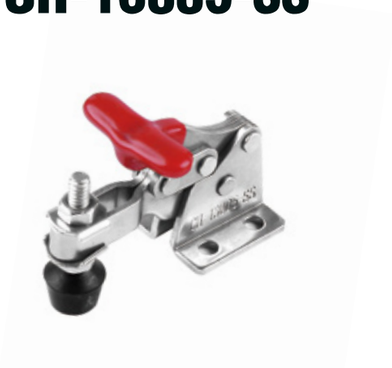

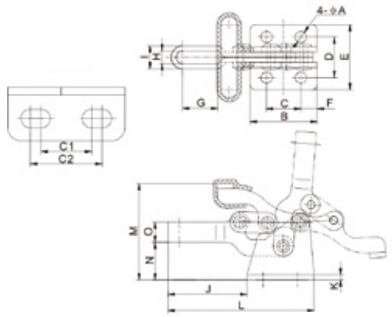

CH-13005-HB

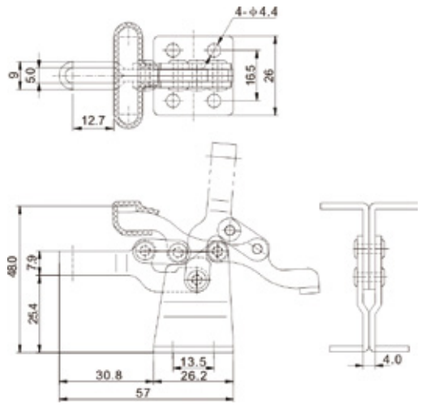

CH-13005-SM

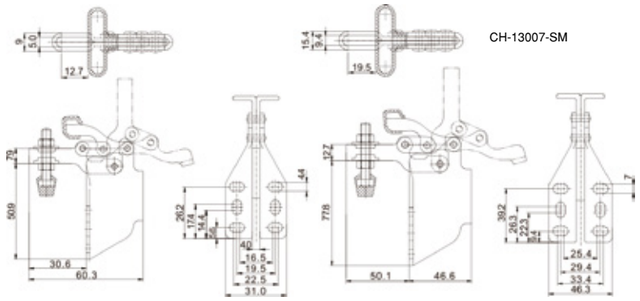

Unit:mm

MODEL	HOLDING CAPACITY(N)	WEIGHT(g)	SPINDLE SUPPLIED	BAR OPENS	HANDLE OPENS	Φ A	B	C	C1	C2	D	E	F	G	H	I	J	K	L	M	N	O
CH-13005(SS)	680	60	CH-FC-10138	90°	170°	4.4	26.2	13.5	-	-	15.9	25.4	6.4	12.7	5	9	30.8	2	57	35.2	14.7	7.9
CH-13007(SS)	1500	230	CH-FC-56212	90°	170°	7	44	-	19	27	29.4	46	10.3	19.5	9.4	15.4	50.1	3	93.7	58.7	22.2	12.7
CH-13008	3200	590	CH-FC-38312	90°	170°	7.9	64.3	-	31	39	38.1	62.7	12.7	28.9	10.4	18.4	70.5	3	135	88.1	33.3	19
CH-13005-HB	680	86	CH-FC-10138	90°	170°																	
CH-13005-SM	680	66	CH-FC-10138	90°	170°																	
CH-13007-SM	1500	360	CH-FC-56212	90°	170°																	

Material : Steel .The product with(SS) mark is available also in stainless steel.

CH-12050-USS

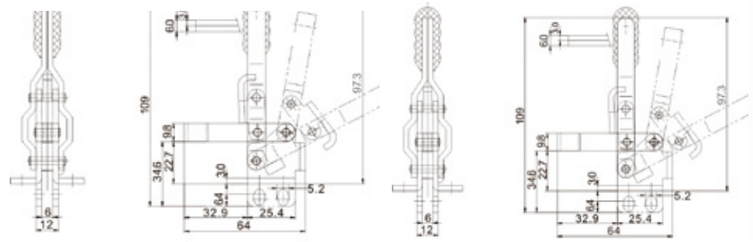

CH-12050-HB

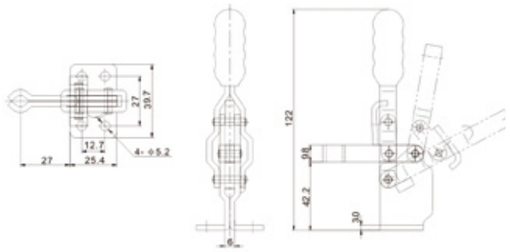

CH-12050-SM

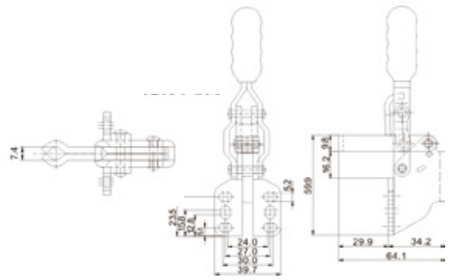

Unit:mm

MODEL	HOLDING CAPACITY(N)	WEIGHT(g)	SPINDLE SUPPLIED	BAR OPENS	HANDLE OPENS	FIXED SPINDLE	SOLID BAR	U-BAR	FLANGED BASE	STRAIGHT BASE	STRAIGHT HANDLE	T-HANDLE
CH-12050(SS)	910	170	CH-FC-14134	100°	60°	●			●		●	
CH-12055	910	170	CH-FC-14134	100°	60°	●				●	●	
CH-12060	910	170	CH-FC-14134	100°	60°		●		●		●	
CH-12065	910	170	CH-FC-14134	100°	60°		●			●	●	
CH-12070	910	170	CH-FC-14134	100°	60°	●			●			●
CH-12075	910	170	CH-FC-14134	100°	60°	●				●		●
CH-12080	910	170	CH-FC-14134	100°	60°		●		●			●
CH-12085	910	170	CH-FC-14134	100°	60°		●			●		●
CH-12050-U(SS)	910	170	CH-FC-14134	100°	60°			●	●		●	
CH-12055-U	910	170	CH-FC-14134	100°	60°			●		●	●	
CH-12050-HB	910	186	CH-FC-14134	100°	60°							
CH-12050-SM	910	186	CH-FC-14134	100°	60°							

Material : Steel .The product with(SS) mark is available also in stainless steel.

CH-101-AIT

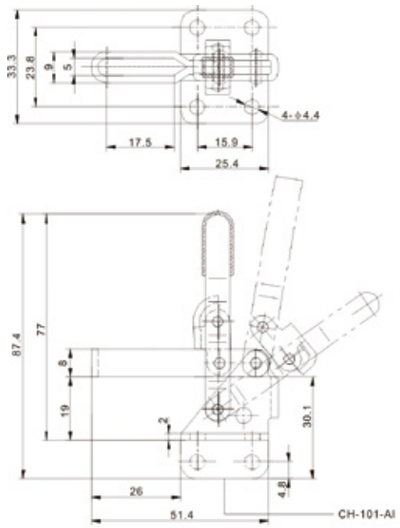

CH-12210

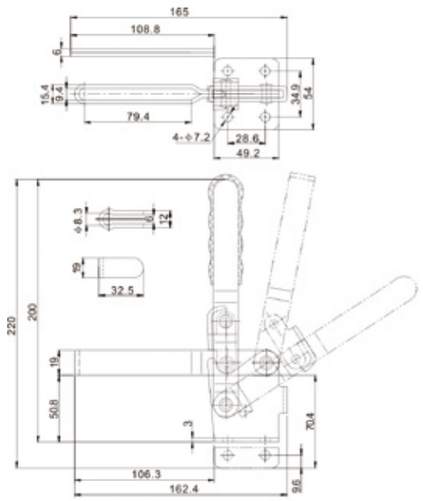

Unit:mm

MODEL	HOLDING CAPACITY(N)	WEIGHT(g)	SPINDLE SUPPLIED	BAR OPENS	HANDLE OPENS	SOLID BAR	U-BAR	FLANGED BASE	STRAIGHT BASE	STRAIGHT HANDLE	T-HANDLE
CH-101-A(SS)	500	60	CH-FC-10138	100°	56°		●	●		●	
CH-101-AI	500	60	CH-FC-10138	100°	56°		●		●	●	
CH-101-AIT	500	60	CH-FC-10138	100°	56°		●		●		●
CH-101-AT	500	60	CH-FC-10138	100°	56°		●	●			●
CH-12205	1820	620	CH-FC-56212	101°	57°		●	●			
CH-12210	1820	620	CH-FC-56212	101°	57°		●		●		
CH-12215	1820	620	CH-FC-56212	101°	57°	●		●			
CH-12220	1820	620	CH-FC-56212	101°	57°	●			●		

Material : Steel .The product with(SS) mark is available also in stainless steel.

CH-12137

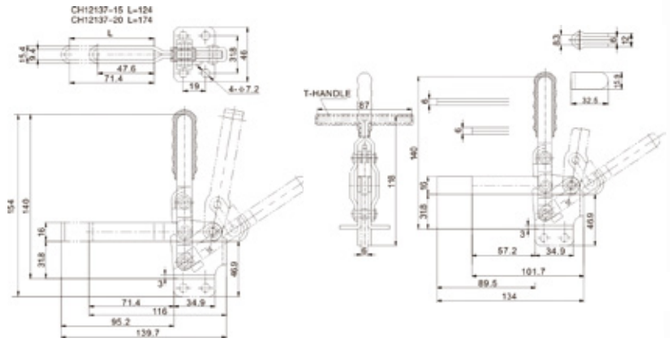

CH-12130-SM

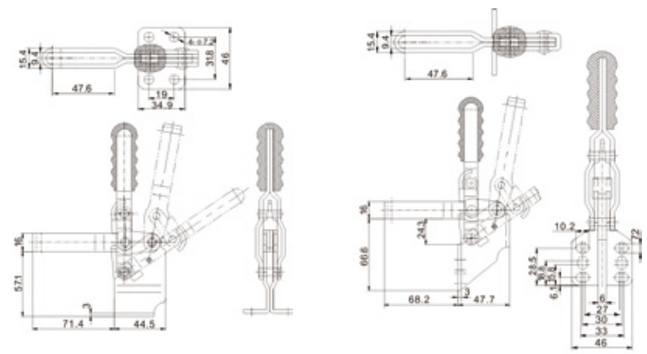

Unit:mm

MODEL	HOLDING CAPACITY(N)	WEIGHT(g)	SPINDLE SUPPLIED	BAR OPENS	HANDLE OPENS	SHORT SOLID-BAR	LONG SOLID-BAR	SHORT U-BAR	LONG U-BAR	FLANGED BASE	STRAIGHT BASE	STRAIGHT HANDLE	T-HANDLE
CH-12130(SS)	2270	355	CH-FC-56212	100°	60°			●		●		●	
CH-12131	2270	370	CH-FC-56212	100°	60°			●		●			●
CH-12132	2270	370	CH-FC-56212	100°	60°				●	●		●	
CH-12133	2270	400	CH-FC-56212	100°	60°				●	●			●
CH-12135	2270	355	CH-FC-56212	100°	60°			●			●	●	
CH-12136	2270	370	CH-FC-56212	100°	60°			●			●		●
CH-12137	2270	370	CH-FC-56212	100°	60°				●		●	●	
CH-12138	2270	400	CH-FC-56212	100°	60°				●		●		●
CH-12140	2270	340	CH-FC-56212	100°	60°	●				●		●	
CH-12141	2270	355	CH-FC-56212	100°	60°	●				●			●
CH-12142	2270	355	CH-FC-56212	100°	60°		●			●		●	
CH-12143	2270	375	CH-FC-56212	100°	60°		●			●			●
CH-12145	2270	340	CH-FC-56212	100°	60°	●					●	●	
CH-12146	2270	355	CH-FC-56212	100°	60°	●					●		●
CH-12147	2270	355	CH-FC-56212	100°	60°		●				●	●	
CH-12148	2270	375	CH-FC-56212	100°	60°		●				●		●
CH-12130-HB	2270	401	CH-FC-56212	100°	60°			●		●		●	
CH-12130-SM	2270	395	CH-FC-56212	100°	60°			●				●	

Material : Steel .The product with(SS) mark is available also in stainless steel.

CH-12265

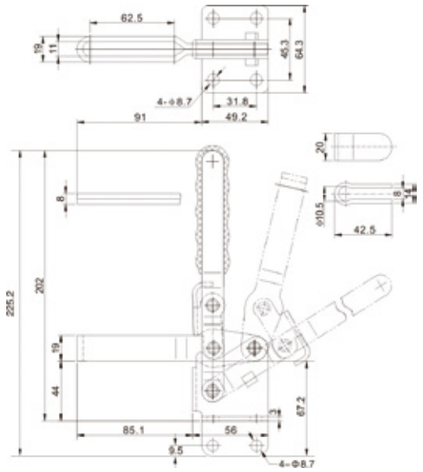

CH-12310

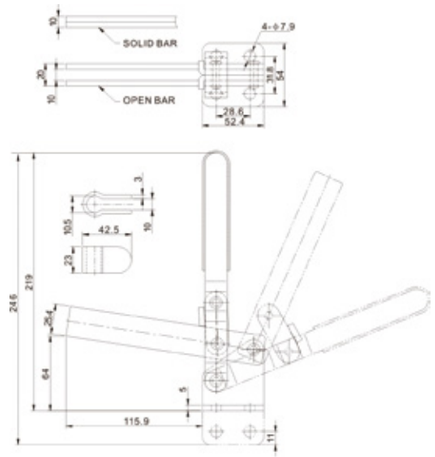

Unit:mm

MODEL	HOLDING CAPACITY(N)	WEIGHT(g)	SPINDLE SUPPLIED	BAR OPENS	HANDLE OPENS	U-BAR	SOLID BAR	OPEN BAR	FLANGED BASE	STRAIGHT BASE	STRAIGHT HANDLE	T-HANDLE
CH-12265(SS)	3400	635	CH-FC-38312	105°	58°	●			●		●	
CH-12270	3400	635	CH-FC-38312	105°	58°	●				●	●	
CH-12275	3400	680	CH-FC-38312	105°	58°		●		●		●	
CH-12280	3400	680	CH-FC-38312	105°	58°		●			●	●	
CH-12285	3400	710	CH-FC-38312	105°	58°	●			●			●
CH-12290	3400	710	CH-FC-38312	105°	58°	●				●		●
CH-12295	3400	735	CH-FC-38312	105°	58°		●		●			●
CH-12300	3400	735	CH-FC-38312	105°	58°		●			●		●
CH-12305	3640	990	CH-FC-38312	100°	65°			●	●			
CH-12310	3640	990	CH-FC-38312	100°	65°			●		●		
CH-12315	3640	990	CH-FC-38312	100°	65°		●		●			
CH-12320	3640	990	CH-FC-38312	100°	65°		●			●		

Material : Steel .The product with(SS) mark is available also in stainless steel.

CH-10247

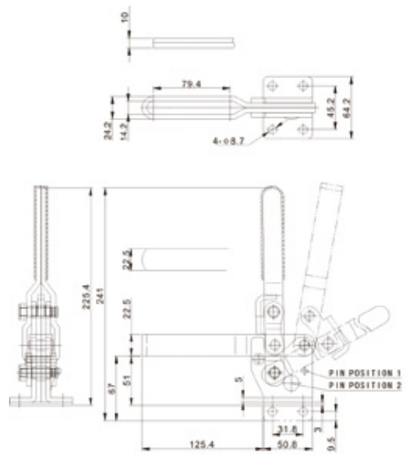

CH-101-JS

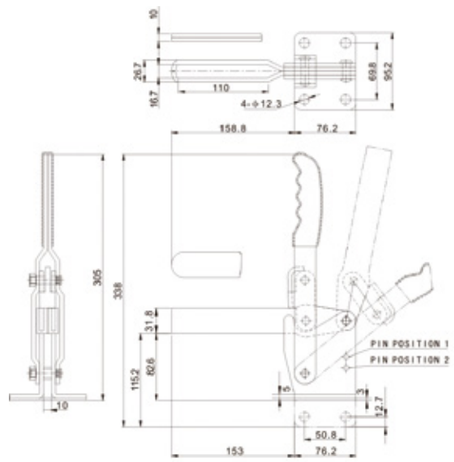

Unit:mm

MODEL	HOLDING CAPACITY(N)	WEIGHT(g)	SPINDLE SUPPLIED	BAR OPENS	HANDLE OPENS	U-BAR	SOLID BAR	FLANGED BASE	STRAIGHT BASE
CH-10247	4500	1250	CH-SA-12300	100°-115°	62°-68°	●		●	
CH-10248	4500	1250	CH-SA-12300	100°-115°	62°-68°	●			●
CH-10249	4500	1250	CH-SA-12300	100°-115°	62°-68°		●	●	
CH-10250	4500	1250	CH-SA-12300	100°-115°	62°-68°		●		●
CH-101-J	5500	2540	CH-SA-58500	100°-140°	48°-60°	●		●	
CH-101-JS	5500	2540	CH-SA-58500	100°-140°	48°-60°		●	●	
CH-101-JSB	5500	2540	CH-SA-58500	100°-140°	48°-60°	●			●
CH-101-JSI	5500	2540	CH-SA-58500	100°-140°	48°-60°		●		●

Material : Steel .

CH-11002-B

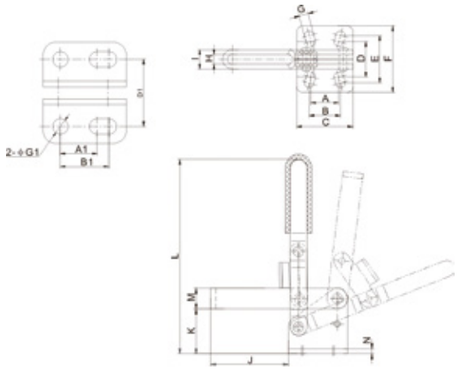

CH-12501-C

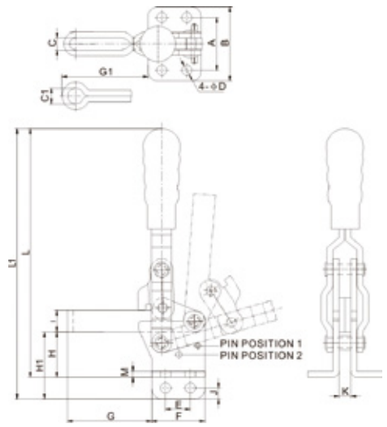

MODEL	U-BAR	FIXED SPINDLE	FLANGED BASE	STRAIGHT BASE
CH-10751-B	●			●
CH-10752-B	●		●	
CH-11501-B	●			●
CH-11501-C		●		●
CH-11502-B	●		●	
CH-11502-C		●	●	

MODEL	U-BAR	FIXED SPINDLE	FLANGED BASE	STRAIGHT BASE
CH-12501-B	●			●
CH-12501-C		●		●
CH-12502-B	●		●	
CH-12502-C		●	●	
CH-13501-B	●			●
CH-13502-B	●		●	

Unit:mm

MODEL	HOLDING CAPACITY(N)	WEIGHT(g)	SPINDLE SUPPLIED	BAR OPENS	HANDLE OPENS	A	A1	B	B1	C	D	D1	E	F	Φ G1	G	H	I	J	K	L	M	N
CH-11002-B	750	128	CH-SA-054008	96°	66°	14.3	-	16	-	29	18	-	24.2	34	-	4.8	5	10	38	22	97	10	2.5
CH-12002-B	1500	240	CH-SA-064010	108°	70°	12.7	-	19	-	35	25	-	27	42	-	5.5	6.1	11.1	44	31	137	13	3
CH-13002-B	1500	520	CH-SA-086512	106°	67°	-	19	-	25	43	-	34.4	-	52	8	-	9.4	15.4	100	35	196	19	3

MODEL	HOLDING CAPACITY(N)	WEIGHT(g)	SPINDLE SUPPLIED	BAR OPENS	HANDLE OPENS	A	B	C	C1	ΦD	E	F	G	G1	H	H1	I	J	K	L	L1	M
CH-10751-B	750	50	CH-SA-055008	130°-195°	90°-125°	-	-	5.5	-	4.4	16	26	31	-	-	28	9	5	4	-	98	2
CH-10752-B	750	50	CH-SA-055008	130°-195°	90°-125°	24	34	5.5	-	4.4	16	26	31	-	16	-	9	-	4	86.5	-	2
CH-11501-B	1500	230	CH-SA-065010	95°-185°	75°-110°	-	-	6.2	-	5.1	12.7	27	43	-	-	33.4	11	5.4	5.8	-	135	3
CH-11501-C	1500	230	CH-SA-065010	95°-185°	75°-110°	-	-	-	6.5	5.1	12.7	27	-	33	-	33.4	11	5.4	5.8	-	135	3
CH-11502-B	1500	230	CH-SA-065010	95°-185°	75°-110°	26.8	37.8	6.2	-	5.1	12.7	27	43	-	23	-	11	5.4	5.8	123	-	3
CH-11502-C	1500	230	CH-SA-065010	95°-185°	75°-110°	26.8	37.8	-	6.5	5.1	12.7	27	-	33	23	-	11	5.4	5.8	123	-	3
CH-12501-B	2500	418	CH-SA-085012	90°-150°	70°-100°	-	-	8.9	-	7.1	19	35	75	-	-	46	17.5	7	6	-	190	3
CH-12501-C	2500	418	CH-SA-085012	90°-150°	70°-100°	-	-	-	8.4	7.1	19	35	-	53	-	46	17.5	7	6	-	190	3
CH-12502-B	2500	418	CH-SA-085012	90°-150°	70°-100°	32	47	8.9	-	7.1	19	35	75	-	32	-	17.5	7	6	175	-	3
CH-12502-C	2500	418	CH-SA-085012	90°-150°	70°-100°	32	47	-	8.4	7.1	19	35	-	53	32	-	17.5	7	6	175	-	3
CH-13501-B	3500	800	CH-SA-108015	90°-180°	70°-100°	-	-	10.6	-	8.3	32	50	95	-	-	63.6	22	9.6	8	-	240	4
CH-13502-B	3500	800	CH-SA-108015	90°-180°	70°-100°	45	64	10.6	-	8.3	32	50	95	-	43	-	22	9.6	8	220	-	4

Material : Steel .

CH-14009

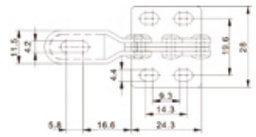

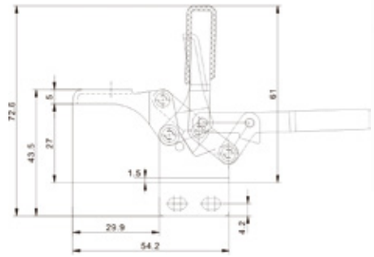

CH-101-B

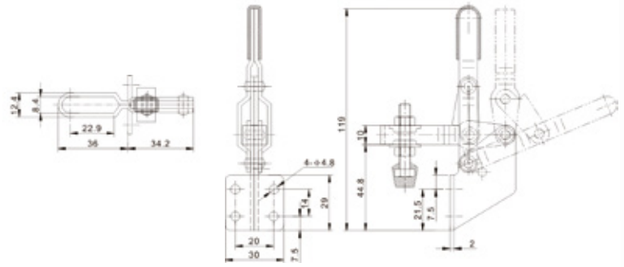

CH-102-BSS

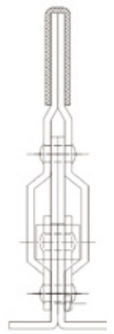

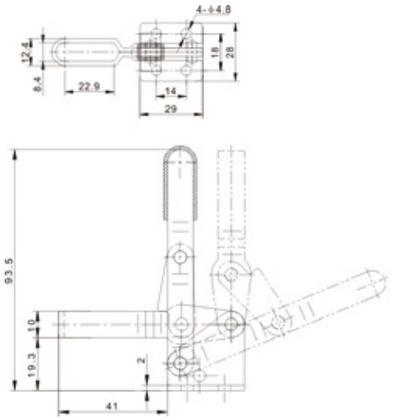

Unit:mm

MODEL	HOLDING CAPACITY(N)	WEIGHT(g)	SPINDLE SUPPLIED	BAR OPENS	HANDLE OPENS	FLANGED BASE	STRAIGHT BASE
CH-13009	300	40	CH-FC-044207	80°	88°	●	
CH-14009	300	40	CH-FC-044207	80°	88°		●
CH-101-B	1000	120	CH-FC-14134	90°	65°		
CH-102-B(SS)	1000	115	CH-FC-14134	90°	65°		

Material : Steel .The product with(SS) mark is available also in stainless steel.

CH-101-D

CH-101-EID

CH-11401

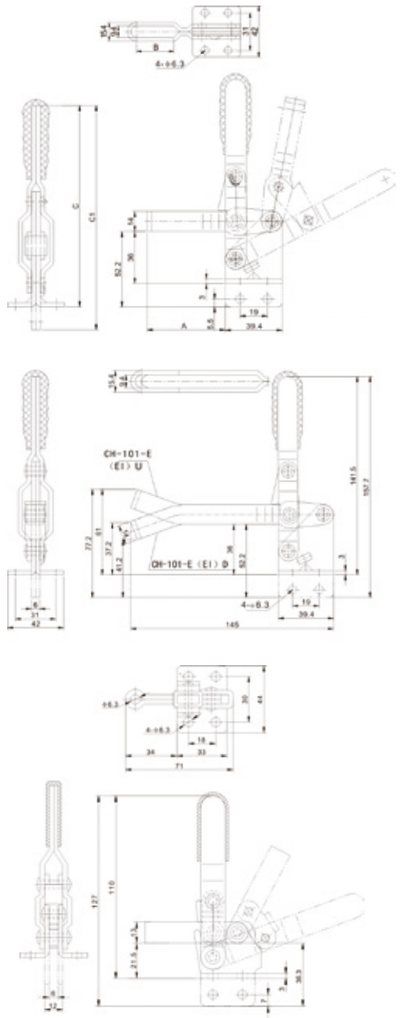

Unit:mm

MODEL	A	B	C	C1
CH-101-D	54	32.7	145	-
CH-101-D-15	154	132.7	145	-
CH-101-DI	54	32.7	-	159
CH-101-DI-15	154	132.7	-	159
CH-101-E	104	82.7	145	-

MODEL	A	B	C	C1
CH-101-E-20	204	182.7	145	-
CH-101-EI	104	82.7	-	159
CH-101-EI-20	204	182.7	-	159
CH-101-DL	54	32.7	182	-

MODEL	HOLDING CAPACITY(N)	WEIGHT(g)	SPINDLE SUPPLIED	BAR OPENS	HANDLE OPENS	U-BAR	LONG U-BAR	CURVE UP U-BAR	CURVE DOWN U-BAR	FLANGED BASE	STRAIGHT BASE	STRAIGHT HANDLE	LONG HANDLE
CH-101-D	1800	330	CH-FC-56212	100°	60°	●				●		●	
CH-101-D-15	1800	412	CH-FC-56212	100°	60°		●			●		●	
CH-101-DI	1800	330	CH-FC-56212	100°	60°	●					●	●	
CH-101-DI-15	1800	412	CH-FC-56212	100°	60°		●				●	●	
CH-101-E	1800	380	CH-FC-56212	100°	60°		●			●		●	
CH-101-E-20	1800	440	CH-FC-56212	100°	60°		●			●		●	
CH-101-EI	1800	380	CH-FC-56212	100°	60°		●				●	●	
CH-101-EI-20	1800	440	CH-FC-56212	100°	60°		●				●	●	
CH-101-DL	1800	350	CH-FC-56212	100°	60°	●				●			●
CH-101-EU	1500	374	CH-FC-56212	100°	60°			●		●		●	
CH-101-ED	1500	374	CH-FC-56212	100°	60°				●	●		●	
CH-101-EIU	1500	374	CH-FC-56212	100°	60°			●			●	●	
CH-101-EID	1500	374	CH-FC-56212	100°	60°				●		●	●	
CH-11401	1000	200	CH-SA-064010	95°	65°					●			
CH-12401	1000	200	CH-SA-064010	95°	65°						●		

Material : Steel .

CH-11421

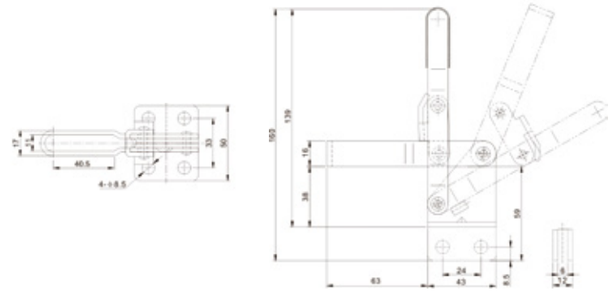

CH-12412

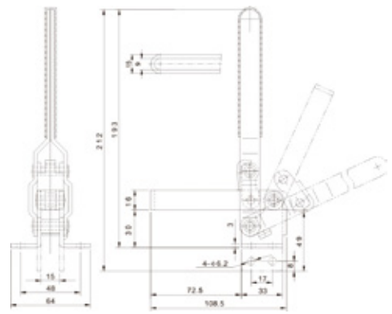

CH-14412

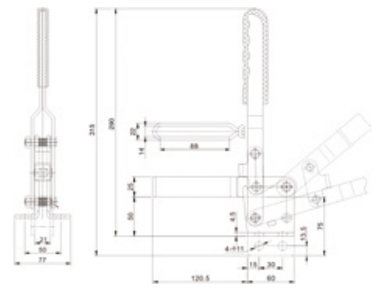

Unit:mm

MODEL	HOLDING CAPACITY(N)	WEIGHT(g)	SPINDLE SUPPLIED	BAR OPENS	HANDLE OPENS	FLANGED BASE	STRAIGHT BASE
CH-11421(SS)	2000	370	CH-SA-085012	94°	45°	●	
CH-12421	2000	370	CH-SA-085012	94°	45°		●
CH-11412	2000	420	CH-SA-085012	110°	64°	●	
CH-12412	2000	420	CH-SA-085012	110°	64°		●
CH-14412	3000	1340	CH-SA-109015	115°	64°	●	
CH-13412	3000	1340	CH-SA-109015	115°	64°		●

Material : Steel .The product with(SS) mark is available also in stainless steel.

CH-10648

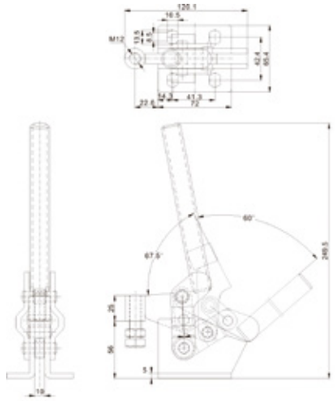

CH-10444

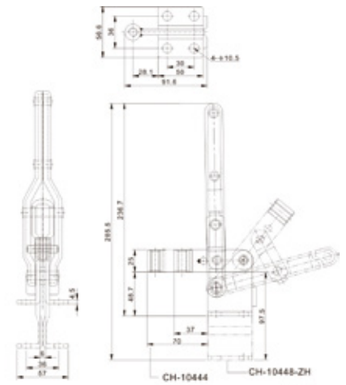

CH-101-K

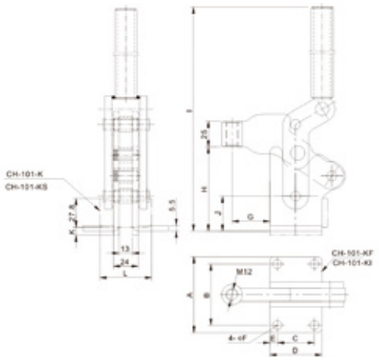

MODEL	HOLDING CAPACITY(N)	WEIGHT(g)	SPINDLE SUPPLIED	BAR OPENS	HANDLE OPENS	LONG BAR	SHORT BAR	FLANGED BASE	HIGH FLANGED BASE
CH-10444	4000	870	CH-SA-38200	129°	75.5°	●		●	
CH-10448-Z	4000	840	CH-SA-38200	129°	75.5°		●	●	
CH-10448-ZH	4000	1000	CH-SA-38200	129°	75.5°		●		●
CH-10648	4500	1310	CH-SA-125017	67.5°	60°			●	

Unit:mm

MODEL	HOLDING CAPACITY(N)	WEIGHT(g)	SPINDLE SUPPLIED	A	B	C	D	E	Φ F	G	H	I	J	K	L
CH-101-K	5000	1730	CH-SA-128017	-	-	-	50.5	-	-	36.1	82.8	288	40.3	0	50.5
CH-101-KI	5000	1680	CH-SA-128017	68	44	44	68	14.5	9	28.6	64.5	270	22	-	-
CH-101-KF	5000	1730	CH-SA-128017	84	69.6	36	50.5	7.25	9	36.1	80.5	285	38	-	-
CH-101-KS	5000	1730	CH-SA-128017	-	-	-	50.5	-	-	36.1	80.5	285	38	8	50.5

Material : Steel .

CH-101-EL

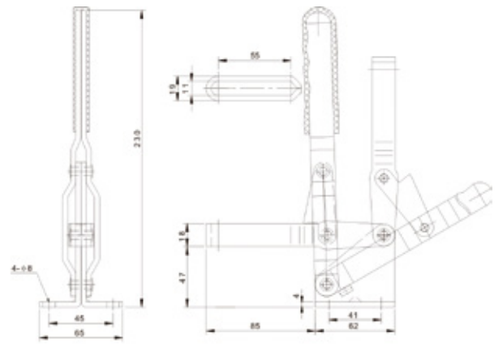

CH-101-H

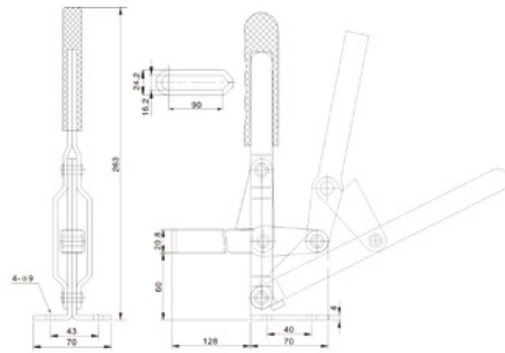

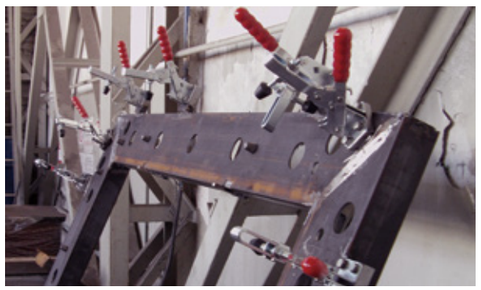

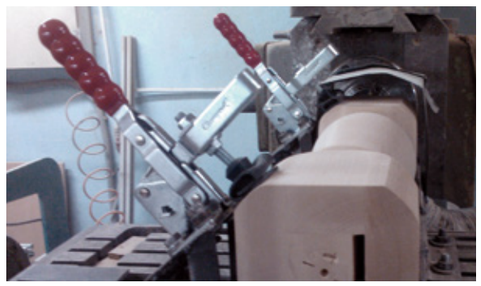

Unit:mm

MODEL	HOLDING CAPACITY(N)	WEIGHT(g)	SPINDLE SUPPLIED	BAR OPENS	HANDLE OPENS
CH-101-EL	3600	860	CH-FC-38312	90°	60°
CH-101-H	4500	1250	CH-SA-12300	101°	63°

Material : Steel .

HORIZONTAL TOGGLE CLAMPS

GRAPAS RÁPIDAS HORIZONTAL

CH-201-AI

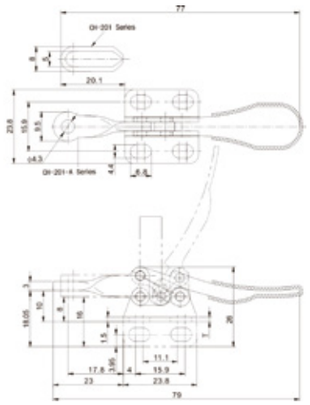

CH-201-B

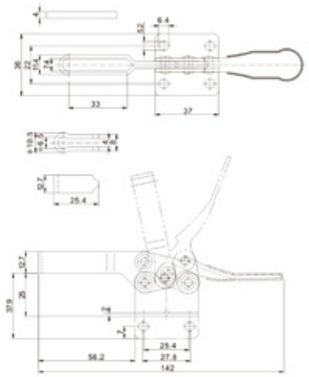

CH-225-DI

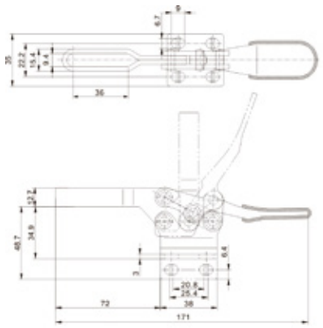

Unit:mm

MODEL	HOLDING CAPACITY(N)	WEIGHT(g)	SPINDLE SUPPLIED	BAR OPENS	HANDLE OPENS	T	SOLID BAR	U-BAR	FLANGED BASE	LEFT HAND FLANGED BASE	RIGHT HAND FLANGED BASE	STRAIGHT BASE
CH-201-A(SS)	270	30	CH-SA-08034(NYLON)	90°	80°	1.5	●		●			
CH-201-AI	270	30	CH-SA-08034(NYLON)	90°	80°	1.5	●					●
CH-201-AL	270	30	CH-SA-08034(NYLON)	90°	80°	3	●			●		
CH-201-AR	270	30	CH-SA-08034(NYLON)	90°	80°	3	●				●	
CH-201(SS)	270	35	CH-SA-08034(NYLON)	90°	80°	1.5		●	●			
CH-201-I	270	35	CH-SA-08034(NYLON)	90°	80°	1.5		●				●
CH-201-L	270	35	CH-SA-08034(NYLON)	90°	80°	3		●		●		
CH-201-R	270	35	CH-SA-08034(NYLON)	90°	80°	3		●			●	
CH-201-B(SS)	900	130	CH-FC-14134	85°	60°			●	●			
CH-201-BI	900	130	CH-FC-14134	85°	60°			●				●
CH-201-BS	900	130	CH-FC-14134	85°	60°		●		●			
CH-201-BSI	900	130	CH-FC-14134	85°	60°		●					●
CH-225-D(SS)	2270	265	CH-FC-56212	90°	65°			●	●			
CH-225-DI	2270	265	CH-FC-56212	90°	65°			●				●

Material : Steel .The product with(SS) mark is available also in stainless steel.

CH-201-BHB

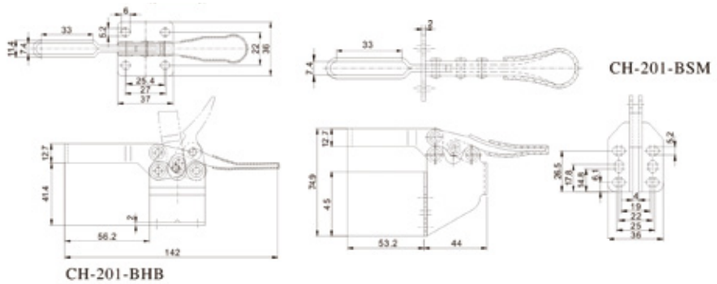

CH-225-DSM

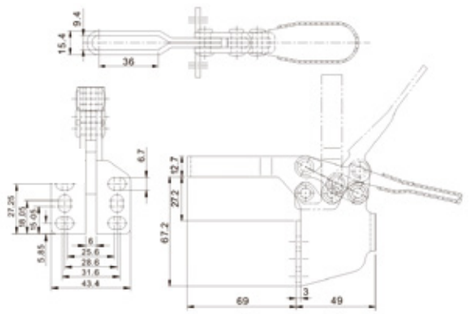

CH-225-DHB

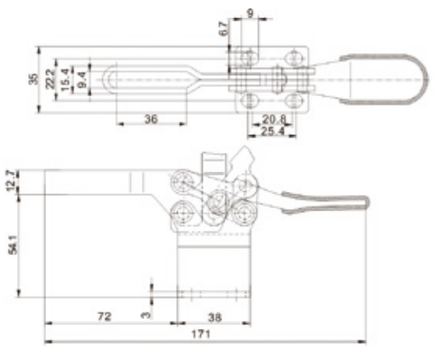

Unit:mm

MODEL	HOLDING CAPACITY(N)	WEIGHT(g)	SPINDLE SUPPLIED	BAR OPENS	HANDLE OPENS
CH-201-BHB	900	146	CH-FC-14134	85°	60°
CH-201-BSM	900	163	CH-FC-14134	85°	60°
CH-225-DHB(SS)	2270	286	CH-FC-56212	90°	65°
CH-225-DSM	2270	315	CH-FC-56212	90°	65°

Material : Steel .The product with(SS) mark is available also in stainless steel.

CH-22100

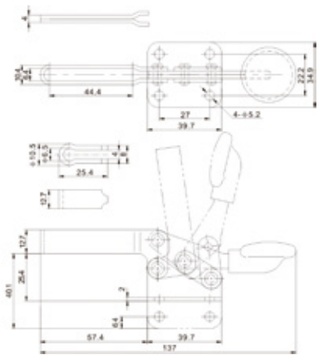

CH-20300

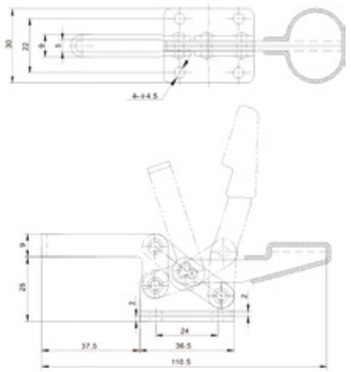

CH-20820

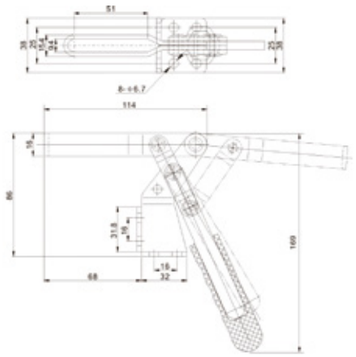

Unit:mm

MODEL	HOLDING CAPACITY(N)	WEIGHT(g)	SPINDLE SUPPLIED	BAR OPENS	HANDLE OPENS	SOLID BAR	U-BAR	FLANGED BASE	STRAIGHT BASE
CH-22100	680	110	CH-FC-14134	81°	68°		●	●	
CH-22105	680	110	CH-FC-14134	81°	68°		●		●
CH-22110	680	110	CH-FC-14134	81°	68°	●		●	
CH-22115	680	110	CH-FC-14134	81°	68°	●			●
CH-20300	300	100	CH-SA-044007	65°	55°				
CH-20820	1000	400	CH-FC-56212	185°	60°				

Material : Steel .

CH-22170

SHORT U BAR CH-22165~CH-22180

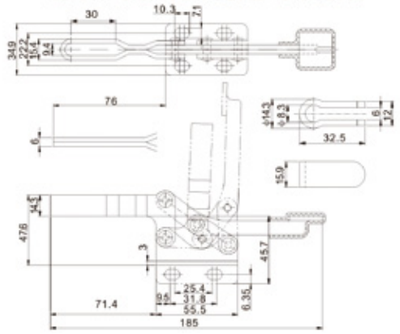

LONG OPEN BAR CH-22185~CH-22200

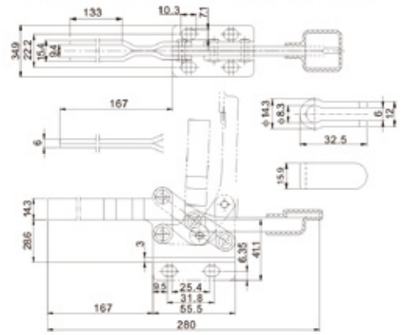

CH-22235

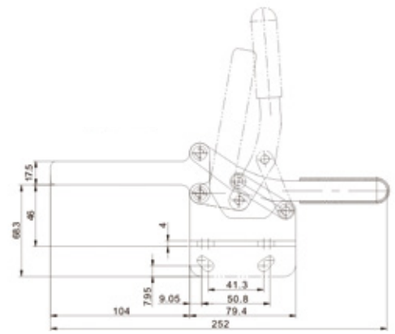

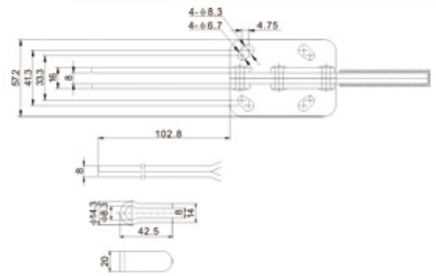

Unit:mm

MODEL	HOLDING CAPACITY(N)	WEIGHT(g)	SPINDLE SUPPLIED	BAR OPENS	HANDLE OPENS	OPEN BAR		SHORT U-BAR	SOLID BAR			FLANGED BASE	STRAIGHT BASE
						STANDARD	LONG		STANDARD	SHORT	LONG		
CH-22165	2500	285	CH-FC-56212	96°	88°			●				●	
CH-22170	2500	285	CH-FC-56212	96°	88°			●					●
CH-22175	2500	300	CH-FC-56212	96°	88°					●		●	
CH-22180	2500	300	CH-FC-56212	96°	88°					●			●
CH-22185	2500	360	CH-FC-56212	96°	88°		●					●	
CH-22190	2500	360	CH-FC-56212	96°	88°		●						●
CH-22195	2500	365	CH-FC-56212	96°	88°						●	●	
CH-22200	2500	365	CH-FC-56212	96°	88°						●		●
CH-22235	2730	640	CH-FC-56212	100°	94°	●						●	
CH-22240	2730	640	CH-FC-56212	100°	94°	●							●
CH-22245	2730	655	CH-FC-56212	100°	94°				●			●	
CH-22250	2730	655	CH-FC-56212	100°	94°				●				●

Material : Steel .

CH-20236

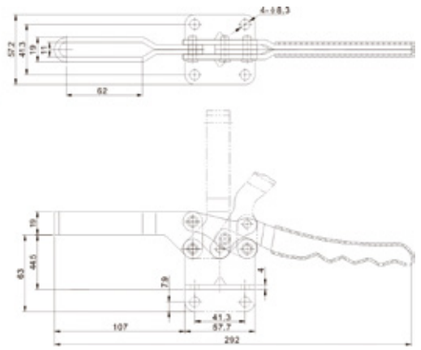

CH-20752-B

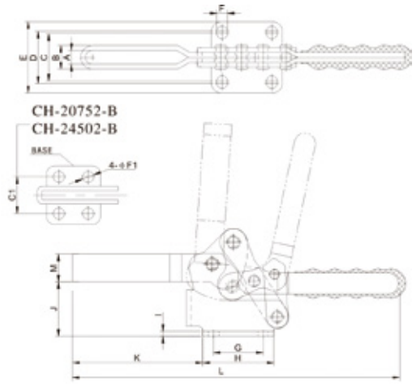

Unit:mm

MODEL	HOLDING CAPACITY(N)	WEIGHT(g)	SPINDLE SUPPLIED	BAR OPENS	HANDLE OPENS	U-BAR	FLANGED BASE	STRAIGHT BASE	A	B	C	C1	D	E	F	Φ F1	G	H	I	J	K	L	M
CH-20235(SS)	3400	700	CH-FC-38312	85°	50°	●	●																
CH-20236	3400	700	CH-FC-38312	85°	50°	●		●															
CH-20752-B(SS)	750	88	CH-SA-053008	94°	76°				5.8	9.8	-	16.8	-	27	-	5.2	13.5	25	2	19	37	116	9.5
CH-21502-B(SS)	1500	220	CH-SA-064010	94°	76°				6.2	11.2	22	-	28	40	5.5	-	26	38	2.5	25	61.8	171	14
CH-22502-B	2500	430	CH-SA-085012	94°	76°				9	15	26	-	31	47	6.6	-	26	42	3	34	79	219	17.5
CH-23502-B	3500	872	CH-SA-107515	94°	76°				11	19	39	-	42.9	59	8.7	-	41.2	59	4	45	108	274	23
CH-24502-B	4500	1400	CH-SA-121017	94°	76°				13.2	23.2	-	41.3	-	67	-	8.7	41.2	66	5	59	128	303	26

Material : Steel .The product with(SS) mark is available also in stainless steel.

CH-201-C

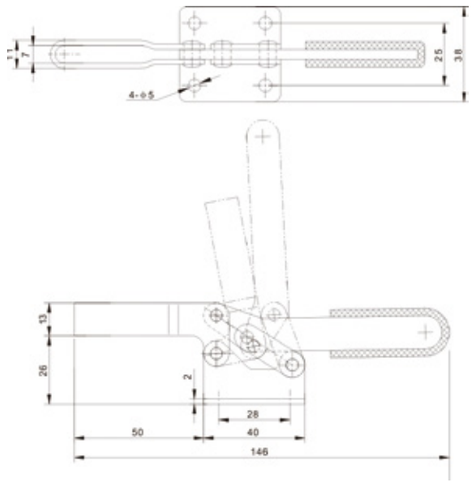

CH-202-FL

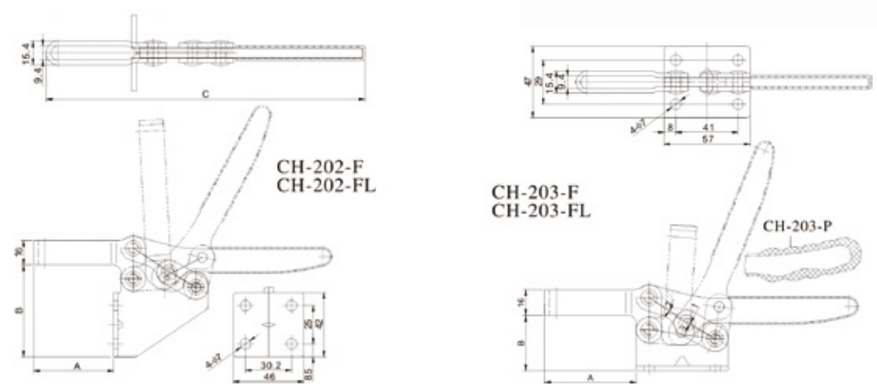

Unit:mm

MODEL	HOLDING CAPACITY(N)	WEIGHT(g)	SPINDLE SUPPLIED	BAR OPENS	HANDLE OPENS	A	B	C	U-BAR	LONG U BAR	FLANGED BASE	SIDE MOUNTED	LONG HANDLE
CH-201-C	1000	147	CH-FC-14134	79°	92°								
CH-203-F(SS)	2270	340	CH-FC-56212	85°	58°	57	34.4	193	●		●		
CH-203-FL	2270	380	CH-FC-56212	85°	58°	94	34.4	230		●	●		
CH-202-F	2270	385	CH-FC-56212	85°	58°	52	60	193	●			●	
CH-202-FL	2270	425	CH-FC-56212	85°	58°	89	60	230		●		●	
CH-203-P	2270	383	CH-FC-56212	85°	58°	57	39.3	233	●		●		●

Material : Steel .The product with(SS) mark is available also in stainless steel.

CH-204-G

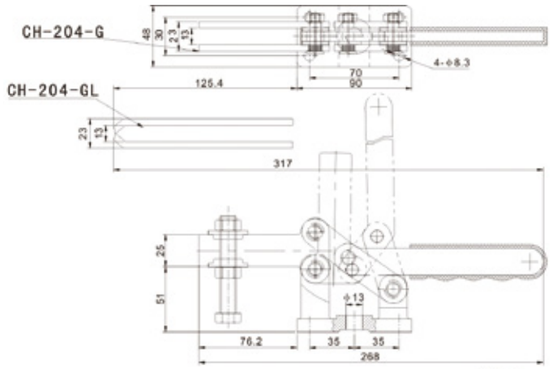

CH-204-GBLH

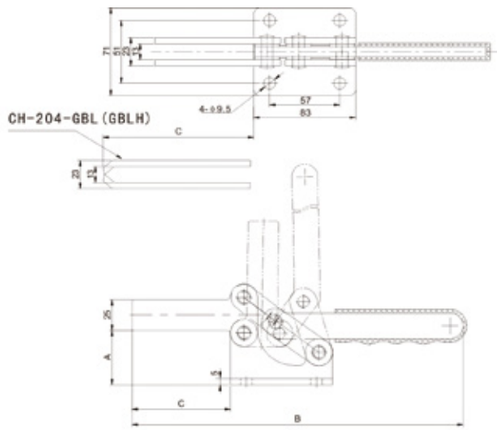

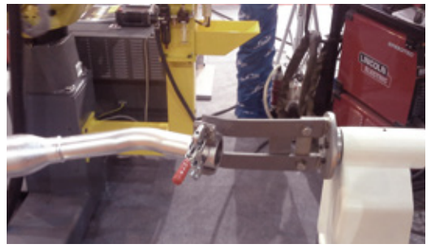

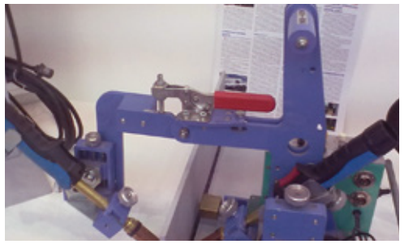

Unit:mm

MODEL	HOLDING CAPACITY(N)	WEIGHT(g)	SPINDLE SUPPLIED	BAR OPENS	HANDLE OPENS	SHORT BAR	OPEN BAR	LONG OPEN BAR	LONG BAR	LOW BASE	HIGH BASE	DUCTILE IRON BASE	A	B	C
CH-204-G	6360	1220	CH-SA-12300	91°	94°		●					●			
CH-204-GL	6360	1220	CH-SA-12300	91°	94°			●				●			
CH-204-GB	6300	1180	CH-SA-12300	90°	94°	●				●			45	269	80
CH-204-GBL	6300	1260	CH-SA-12300	90°	94°				●	●			45	316	128
CH-204-GBLH	6300	1465	CH-SA-12300	90°	94°				●		●		71	316	128

Material : Steel .

CH-22010

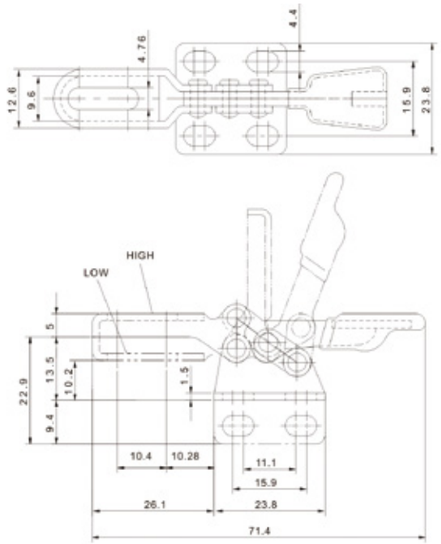

CH-21800

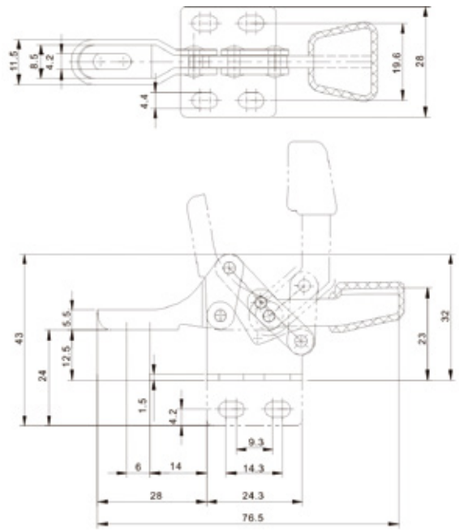

Unit:mm

MODEL	HOLDING CAPACITY(N)	WEIGHT(g)	SPINDLE SUPPLIED	BAR OPENS	HANDLE OPENS	HIGH BAR	LOW BAR	FLANGED BASE	STRAIGHT BASE	RIGHT HAND FLANGED BASE	LEFT HAND FLANGED BASE
CH-22005	227	25	CH-SA-08034(NYLON)	90°	60°	●		●			
CH-22010	227	25	CH-SA-08034(NYLON)	90°	60°	●			●		
CH-22015	227	25	CH-SA-08034(NYLON)	90°	60°	●				●	
CH-22020	227	25	CH-SA-08034(NYLON)	90°	60°	●					●
CH-22025	227	25	CH-SA-08034(NYLON)	90°	60°		●	●			
CH-22030	227	25	CH-SA-08034(NYLON)	90°	60°		●		●		
CH-22035	227	25	CH-SA-08034(NYLON)	90°	60°		●			●	
CH-22040	227	25	CH-SA-08034(NYLON)	90°	60°		●				●
CH-20800(SS)	300	40	CH-FC-042507	90°	103°			●			
CH-21800	300	40	CH-FC-042507	90°	103°				●		

Material : Steel .The product with(SS) mark is available also in stainless steel.

CH-20100

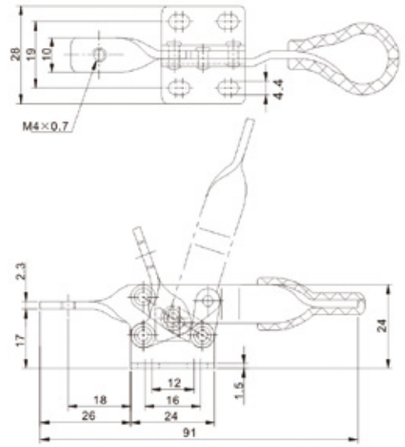

CH-20400

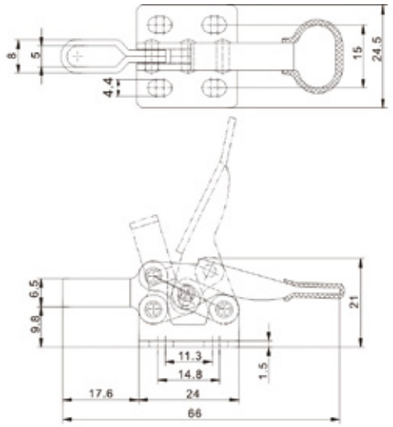

CH-2300

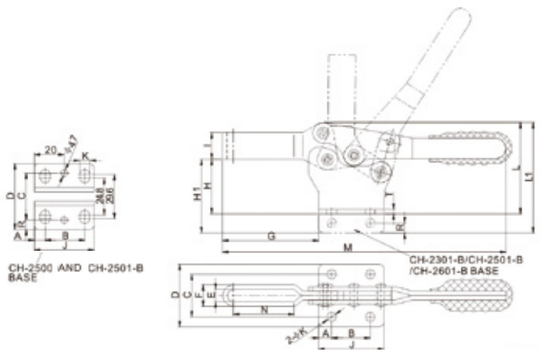

Unit:mm

MODEL	HOLDING CAPACITY(N)	WEIGHT(g)	SPINDLE SUPPLIED	BAR OPENS	HANDLE OPENS	A	B	C	D	E	F	G	H	H1	I	J	Φ K	L	L1	M	N	R	T
CH-20100	200	35	CH-SA-042507	75°	75°																		
CH-20400	200	25.5	CH-SA-042507	55°	60°																		
CH-2300	680	94	CH-FC-10138	90°	58°	7.3	13.4	16.8	25.7	5	9	39	20.7	-	11	28	4.5	37.35	-	115.4	23.8	-	2
CH-2301-B	680	94	CH-FC-10138	90°	58°	7.3	13.4	-	-	5	9	39	-	28.5	11	28	4.5	-	45.15	115.4	23.8	4.45	2
CH-2500	2270	318	CH-FC-56300	90°	58°	7.2	26.2	31.3	44	9.4	15.4	72	34.6	-	14.2	39.6	6.8	62.6	-	186	47.2	-	3
CH-2501-B	2270	318	CH-FC-56300	90°	58°	7.2	26.2	-	-	9.4	15.4	72	-	48.8	14.2	39.6	6.8	-	76.8	186	47.2	7.2	3
CH-2600	3400	352	CH-FC-56300	90°	58°	8.8	26	28.6	42	9.4	15.4	64.5	36.8	-	18	44	6.4	61.5	-	190.6	40.8	-	3
CH-2601-B	3400	352	CH-FC-56300	90°	58°	8.8	26	-	-	9.4	15.4	64.5	-	50	18	44	6.4	-	74.7	190.6	40.8	6.7	3

Material : Steel .

CH-22382

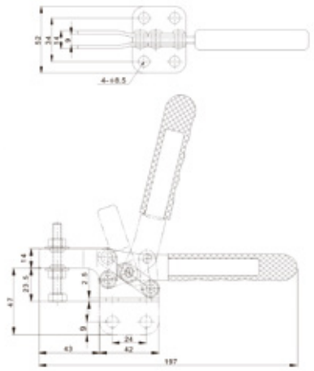

CH-26382

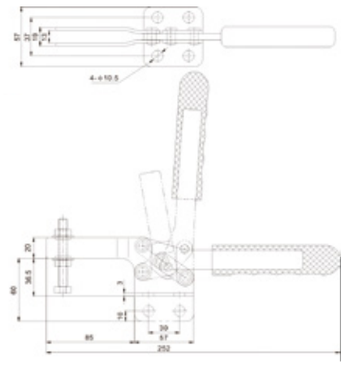

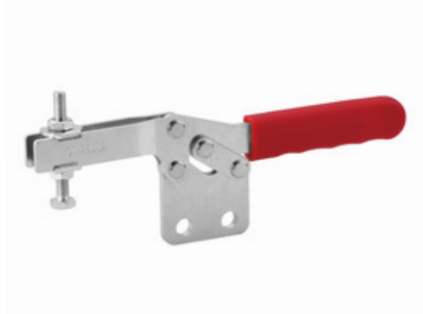

CH-21384

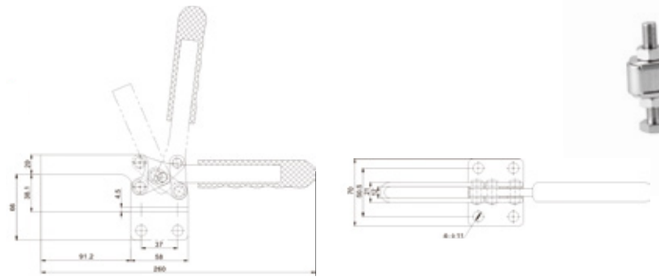

Unit:mm

MODEL	HOLDING CAPACITY(N)	WEIGHT(g)	SPINDLE SUPPLIED	BAR OPENS	HANDLE OPENS	FLANGED BASE	STRAIGHT BASE
CH-21382 (SS)	2500	228	CH-SA-065010	75°	70°	●	
CH-22382	2500	228	CH-SA-065010	75°	70°		●
CH-25382	2800	480	CH-SA-086512	80°	86°	●	
CH-26382	2800	480	CH-SA-086512	80°	86°		●
CH-21384	5000	750	CH-SA-106515	65°	85°	●	
CH-22384	5000	750	CH-SA-106515	65°	85°		●

Material : Steel .The product with(SS) mark is available also in stainless steel.

CH-21383

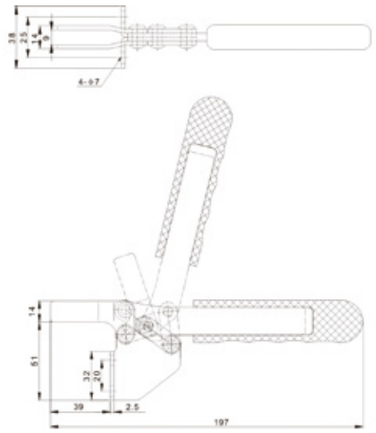

CH-25383

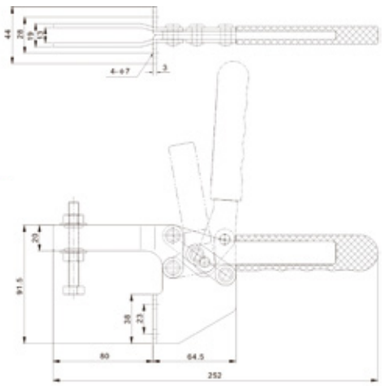

CH-21385

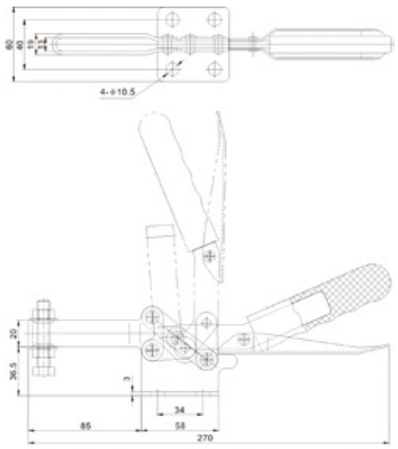

Unit:mm

MODEL	HOLDING CAPACITY(N)	WEIGHT(g)	SPINDLE SUPPLIED	BAR OPENS	HANDLE OPENS
CH-21383	2500	250	CH-SA-065010	72°	72°
CH-25383	2800	530	CH-SA-105015 OR CH-SA-086512	80°	80°
CH-21385	3000	560	CH-SA-38200	80°	85°
Material : Steel .					

CH-220-WLH

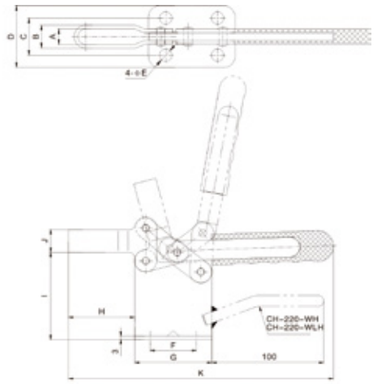

CH-20448

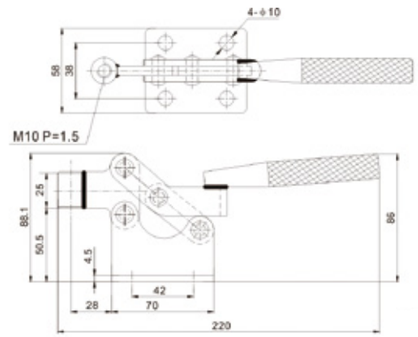

Unit:mm

MODEL	HOLDING CAPACITY(N)	WEIGHT(g)	SPINDLE SUPPLIED	BAR OPENS	HANDLE OPENS	A	B	C	D	ΦE	F	G	H	I	J	K
CH-200-W	4000	600	CH-FC-38312	75°	77°	12.6	18.6	30	50	10	42	70	60	54	20.5	240
CH-200-WL	4000	640	CH-FC-38312	75°	77°	12.6	18.6	30	50	10	42	70	110	54	20.5	290
CH-200-WH	4000	700	CH-FC-38412	75°	77°	12.6	18.6	30	50	10	42	70	60	79	20.5	240
CH-200-WLH	4000	745	CH-FC-38412	75°	77°	12.6	18.6	30	50	10	42	70	110	79	20.5	290
CH-220-WH	4000	790	CH-FC-38412	75°	77°	12.6	18.6	30	50	10	42	70	60	79	20.5	240
CH-220-WLH	4000	830	CH-FC-38412	75°	77°	12.6	18.6	30	50	10	42	70	110	79	20.5	290
CH-20448	3500	760	CH-SA-105015	90°	83°											
Material : Steel .																

PUSH-PULL CLAMPS

GRAPAS RÁPIDAS DE APRIETE Y TRACCIÓN

CH-301-AM

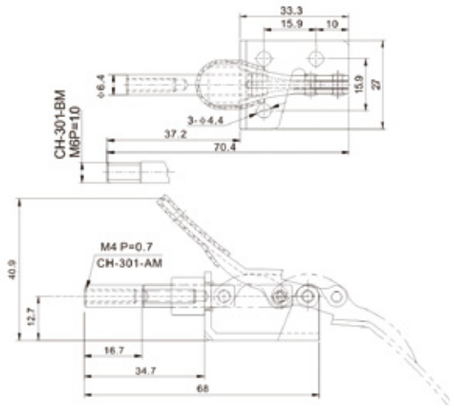

CH-301-CL
CH-301-CR

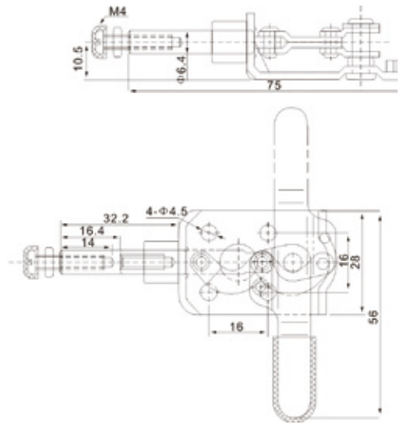

CH-302-FMSS

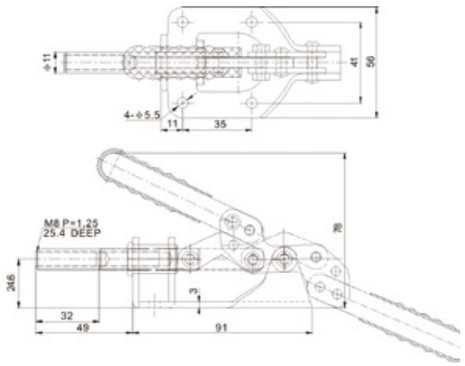

Unit:mm

MODEL	HOLDING CAPACITY(N)	WEIGHT(g)	SPINDLE SUPPLIED	HANDLE OPENS	PLUNGER STROKE(mm)
CH-301-AM(SS)	450	50	CH-SA-042007(NYLON)	190°	16.7
CH-301-BM	450	50	M6 P=1.0 NUT	190°	16.7
CH-301-CR	400	56	CH-FC-042007	180°	16.4
CH-301-CL	400	56	CH-FC-042007	180°	16.4
CH-302-FM(SS)	1360	300	CH-SA-085012	180°	32

Material : Steel .The product with(SS) mark is available also in stainless steel.

CH-36092M

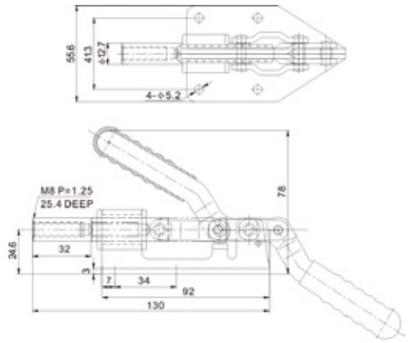

CH-36003M

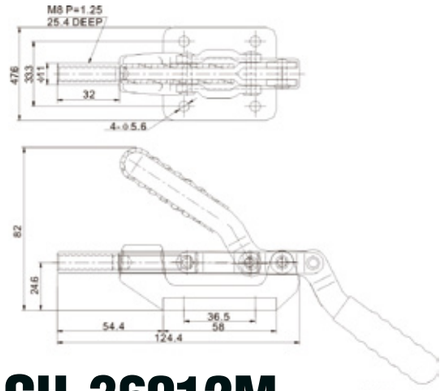

CH-36012M

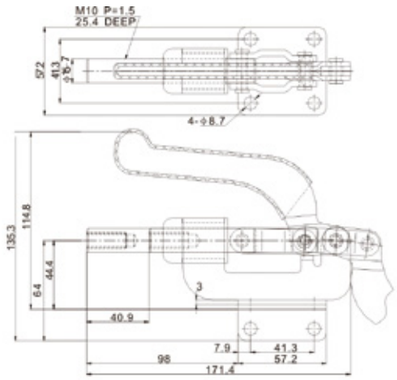

Unit:mm

MODEL	HOLDING CAPACITY(N)	WEIGHT(g)	SPINDLE SUPPLIED	HANDLE OPENS	PLUNGER STROKE(mm)	FLANGED BAR	STRAIGHT BASE
CH-36092M(SS)	1800	397	CH-SA-085012	180°	32		
CH-36003M	2720	395	CH-SA-085012	180°	31.8		
CH-36010M	3640	800	CH-SA-105015	180°	40.9	●	
CH-36012M	3640	800	CH-SA-105015	180°	40.9		●

Material : Steel .The product with(SS) mark is available also in stainless steel.

CH-30607M

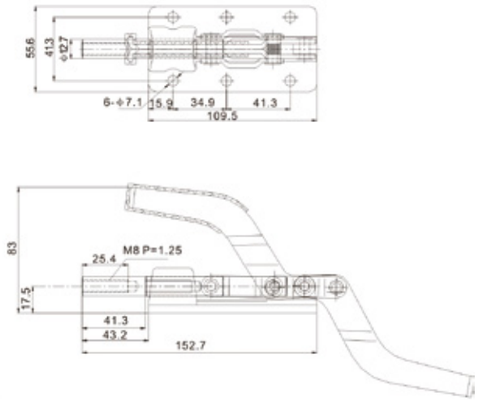

CH-36330M

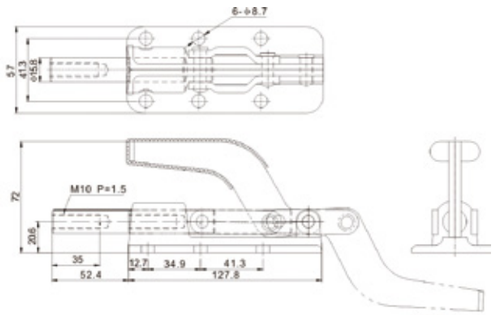

CH-36330ML

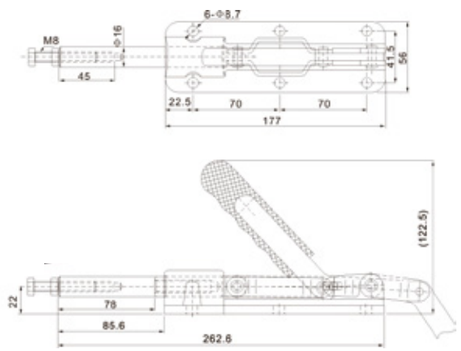

Unit:mm

MODEL	HOLDING CAPACITY(N)	WEIGHT(g)	SPINDLE SUPPLIED	HANDLE OPENS	PLUNGER STROKE(mm)
CH-30607M	3180	700	CH-SA-085012	180°	41.3
CH-30608M	3180	700	CH-SA-085012	180°	41.3
CH-36330M	11360	1050	CH-SA-105015	180°	50.8
CH-36330ML	3500	1250	CH-SA-085012	185°	78

Material : Steel .The product with(SS) mark is available also in stainless steel.

CH-30450

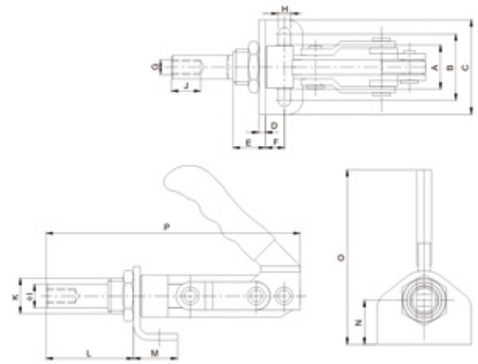

CH-36202M

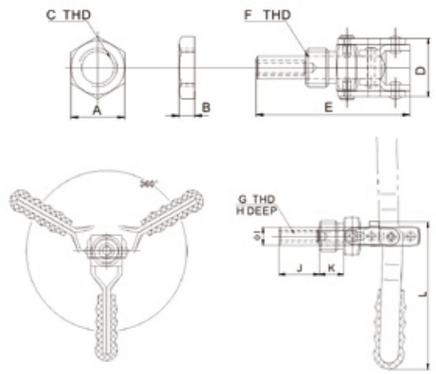

CH-36203

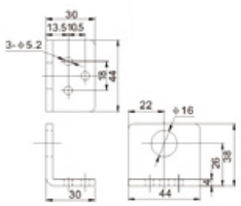

CH-36205

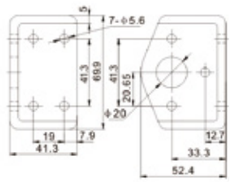

CH-36225

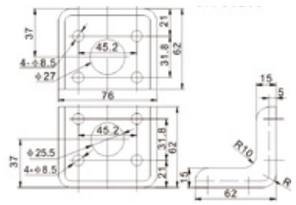

Unit:mm

MODEL	HOLDING CAPACITY(N)	WEIGHT(g)	SPINDLE SUPPLIED	HANDLE OPENS	PLUNGER STROKE(mm)	A	B	C	F	D	E	G	H	ΦI	J	K	L	M	N	O	P
CH-30250	2500	385	CH-SA-062010	190°	32	30	42	57	17	10	4	M6P=1.0	6.5	11	12	M20P=1.5	51	23	25	85	136
CH-30450	4500	774	CH-SA-103015	195°	38	30	45	64	22	13	4.5	M10P=1.5	8.5	16	25	M24P=1.5	59.5	28	28	115	173
CH-36202M(SS)	910	113	CH-SA-064010		20	24	6.4	M16 P=1.5		24	64.2	M6 P=1	15.8	9.4	21	12.7	75	OPTIONAL MOUNTING BRACKET			
CH-36204M(SS)	1360	270	CH-SA-085012		39	30	6.4	M20 P=1.5		28.2	115	M8 P=1.25	25.4	11	39.7	15.9	98	CH-36203 CH-36205 CH-36225M			
CH-36224M(SS)	3180	770	CH-SA-105015		65.5	41	8	M27 P=2.0		40	170.8	M10 P=1.5	31.7	15.8	70.3	22.3	137				

Material : Steel .The product with(SS) mark is available also in stainless steel.

CH-304-HM

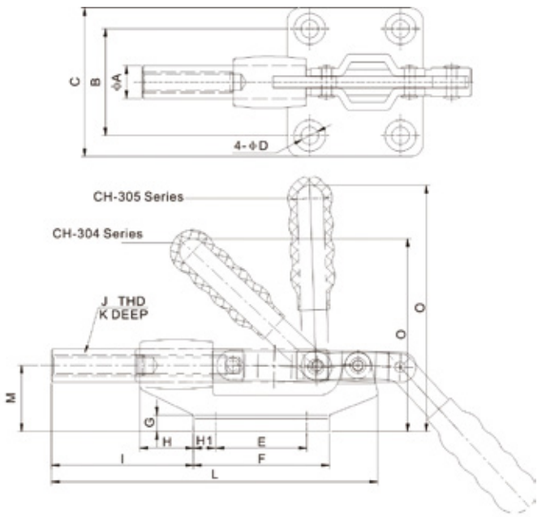

CH-305-HM

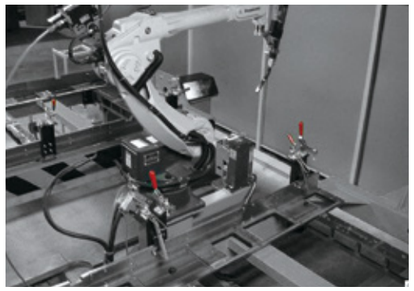

Unit:mm

MODEL	HOLDING CAPACITY(N)	WEIGHT(g)	SPINDLE SUPPLIED	HANDLE OPENS	PLUNGER STROKE(mm)	ΦA	B	C	ΦD	E	F	G	H	H 1	I	J	K	L	M	O
CH-304-CM	2270	340	CH-SA-085012	180°	32	12.7	41.1	57.2	6.7	35	52.4	4.8	20.6	8.7	54.8	M8P=1.25	30.2	125.7	25.4	74.2
CH-305-CM	2270	340	CH-SA-085012	180°	32	12.7	41.1	57.2	6.7	35	52.4	4.8	20.6	8.7	54.8	M8P=1.25	30.2	125.7	25.4	94.8
CH-304-EM(SS)	3860	580	CH-SA-105015	180°	42	16	41.1	57.2	8.3	41.1	58.8	4.8	31.8	8.8	76	M10P=1.5	39.2	158.2	31.8	93.5
CH-305-EM	3860	580	CH-SA-105015	180°	42	16	41.1	57.2	8.3	41.1	58.8	4.8	31.8	8.8	76	M10P=1.5	39.2	158.2	31.8	119.5
CH-304-HM	6800	1480	CH-SA-125017	180°	60	19.2	50.8	71.4	8.3	50.8	73.2	6.4	50.8	11.1	119.8	M12P=1.75	50	235	44.4	133.4
CH-305-HM	6800	1480	CH-SA-125017	180°	60	19.2	50.8	71.4	8.3	50.8	73.2	6.4	50.8	11.1	119.8	M12P=1.75	50	235	44.4	171.6
CH-305-BM	1800	480	CH-SA-085012	185°	33.8	12	32	48	7	34	50	6.6	22	-	66.7	M8P=1.25	33.8	146.9	25	152.5

Material : Steel .The product with(SS) mark is available also in stainless steel.

CH-304-HMY

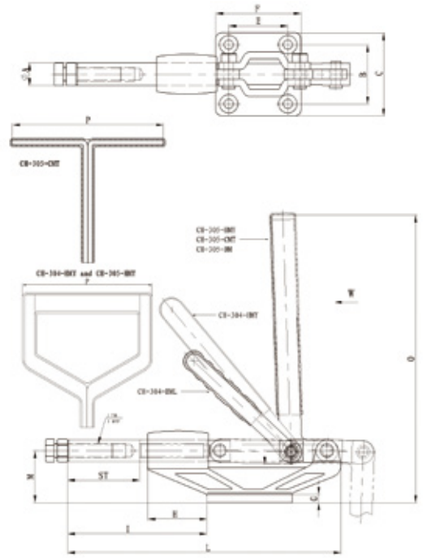

CH-305-HMY

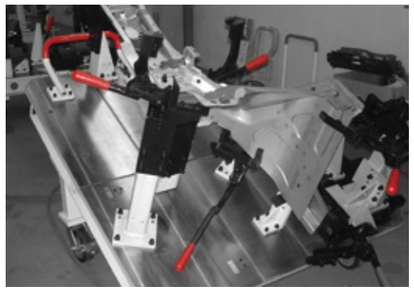

Unit:mm

MODEL	HOLDING CAPACITY(N)	WEIGHT(g)	SPINDLE SUPPLIED	PLUNGER STROKE(mm)	ΦA	B	C	ΦD	E	F	G	H	I	J	K	L	M	O	P
CH-305-CMT	2270	395	CH-SA-085012	32	12.7	41.1	57.2	6.7	35	52.4	4.8	20.8	54.8	M8P=1.25	30.2	125.4	25.4	130	90
CH-304-EML	3860	663	CH-SA-105015	42	16	41.1	57.2	8.3	41.1	58.8	4.8	31.8	76	M10P=1.5	39.5	158.2	31.8	136.3	-
CH-304-HMY	6800	1600	CH-SA-125017	60	19.2	50.8	71.4	8.3	50.8	73.2	6.4	50.8	119.8	M12P=1.75	50	235	44.4	174.9	111
CH-305-HMY	6800	1600	CH-SA-125017	60	19.2	50.8	71.4	8.3	50.8	73.2	6.4	50.8	119.8	M12P=1.75	50	235	44.4	218	126

Material : Steel .

CH-31200

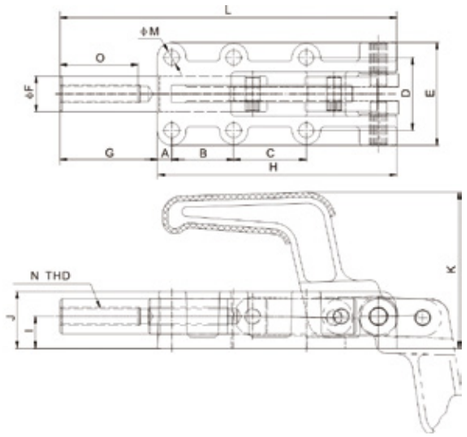

CH-30510M

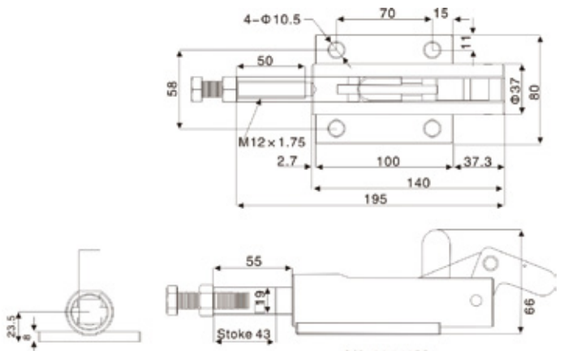

CH-30511M

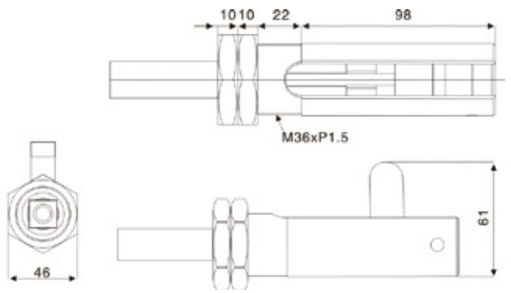

Unit:mm

MODEL	HOLDING CAPACITY(N)	WEIGHT(g)	SPINDLE SUPPLIED	HANDLE OPENS	PLUNGER STROKE(mm)	A	B	C	D	E	ΦF	G	H	I	J	K	L	ΦM	N	O
CH-30600	6000	570	CH-SA-086512	185°	32	25	36.5	-	33.6	46	14	38	89	12	22	67	127	5.5	M8P=1.25	30
CH-31200	12000	1550	CH-SA-107515	185°	50	8	35	41	41	58	20	55	135	18	32	88	190	8.5	M10P=1.5	40
CH-32500	25000	4100	CH-SA-127517	185°	75	12	45	45	54	78	25	102	196	22	40	110	298	10.3	M12P=1.75	60
CH-35000	50000	6500	CH-SA-167520	185°	100	12	70	70	57	84	30	138	254	28	50	123	392	10.3	M16P=2	60
CH-30510M	11000	1750	CH-SA-125017	105°	43															
CH-30511M	11000	1300	CH-SA-125017	105°	43															

Material : Steel .

CH-30509M

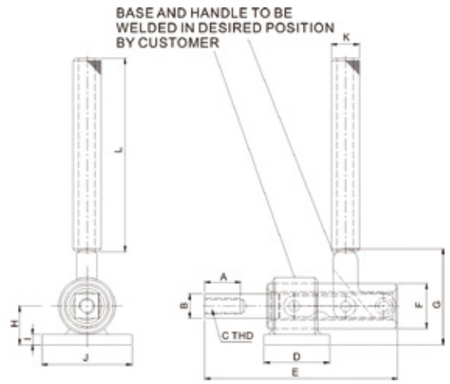

CH-30519M

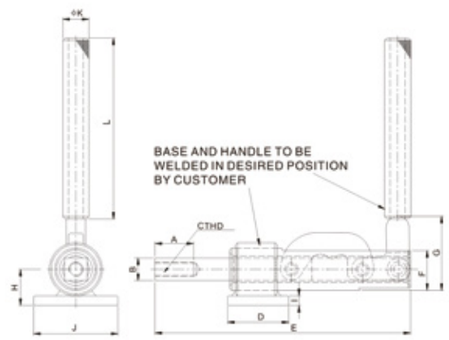

Unit:mm

MODEL	HOLDING CAPACITY(N)	WEIGHT(g)	SPINDLE SUPPLIED	PLUNGER STROKE(mm)	HANDLE OPENS	A	ΦB	C	D	E	F	G	H	I	J	K	L
CH-30509M	11360	1414	CH-SA-125017	46	90°	30	18.7	M12P=1.75	50	150	34.9	74	30	8	70	21.7	152.4
CH-30609M	22730	2968	CH-SA-165020	59.5	90°	38.1	25	M16P=2	70	197.5	44.4	87	40	11.2	90	27.2	152.4
CH-30519M	11360	1700	CH-SA-125017	59.5	170°	30	18.7	M12P=1.75	50	212	34.9	74	30	8	70	21.7	152.4
CH-30619M	22730	3600	CH-SA-165020	77.8	170°	38.1	25	M16P=2.0	70	272	44.4	87	40	11.2	90	27.2	152.4

Material : Steel .

CH-32500HL

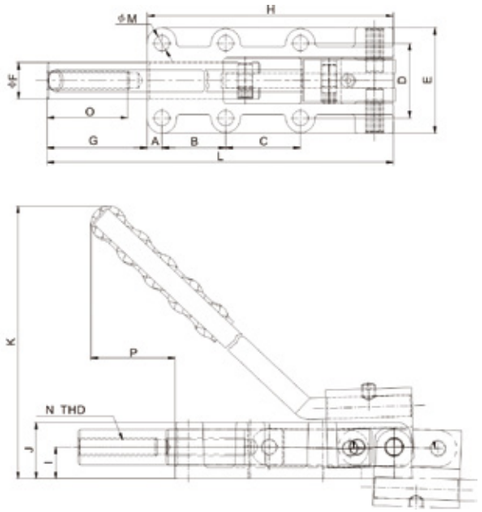

CH-30600PR

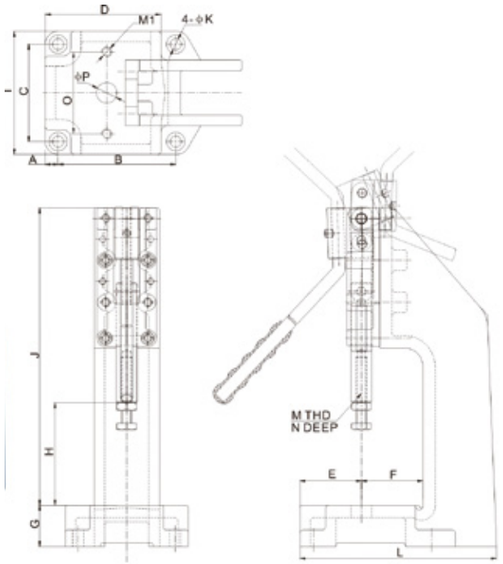

Unit:mm

MODEL	HOLDING CAPACITY(N)	WEIGHT(g)	SPINDLE SUPPLIED	HANDLE OPENS	PLUNGER STROKE(mm)	A	B	C	D	E	ΦF	G	H	I	J	K	L	ΦM	N	O	P
CH-30600HL	6000	660	CH-SA-086512	185°	32	25	36.5	-	33.6	46	14	38	89	12	22	132.7	127	5.5	M8P=1.25	30	65
CH-31200HL	12000	1750	CH-SA-107515	185°	50	8	35	41	41	58	20	55	135	18	32	200	190	8.5	M10P=1.5	42	100
CH-32500HL	25000	4320	CH-SA-127517	185°	75	12	45	45	54	78	25	102	196	22	40	278	298	10.3	M12P=1.75	60	115
CH-35000HL	50000	7100	CH-SA-167520	185°	100	12	70	70	57	84	30	138	254	28	50	355	392	10.3	M16P=2	60	172

MODEL	HOLDING CAPACITY(N)	WEIGHT(g)	SPINDLE SUPPLIED	HANDLE OPENS	PLUNGER STROKE(mm)	A	B	C	D	E	F	G	H	I	J	ΦK	L	M	N	O	ΦP	M1
CH-30600PR	6000	3700	CH-SA-086512	185°	32	12.1	95	80	94	50	50	30	75	100	202	9	155	M8P=1.25	30	70	15.6	M8*1.25
CH-31200PR	12000	8740	CH-SA-107515	185°	50	12.5	115	95	115.7	60	60	40	100	120	290	11	203	M10P=1.5	42	80	20	M10*1.5
CH-32500PR	25000	18830	CH-SA-127517	185°	75	14	145	125	137	67	75	50	120	150	418	11	238	M12P=1.75	60	90	30	M10*1.5
Material : Steel .																						

CH-36006

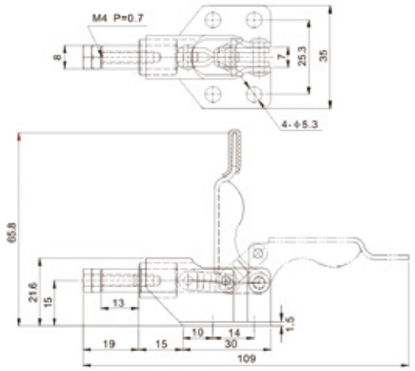

CH-36060

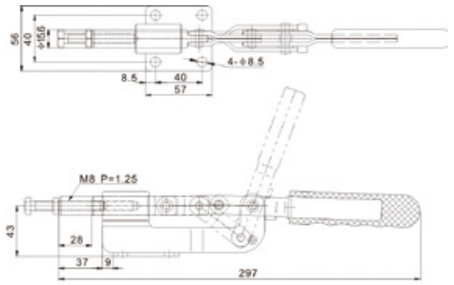

CH-36070

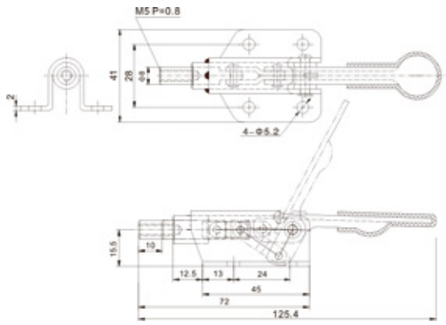

Unit:mm

MODEL	HOLDING CAPACITY(N)	WEIGHT(g)	SPINDLE SUPPLIED	HANDLE OPENS	PLUNGER STROKE(mm)
CH-36006	500	64	CH-SA-041507	93°	13
CH-36060	3000	690	CH-SA-083012	76°	28
CH-36070	500	100	CH-SA-051508	66°	10
Material : Steel .					

CH-30282M

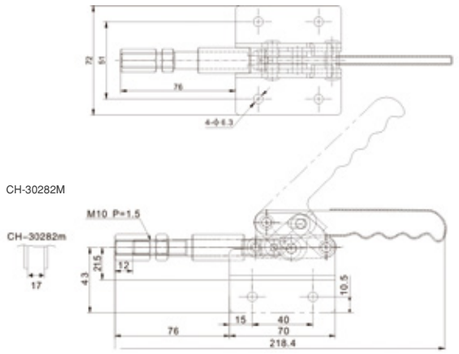

CH-30290M

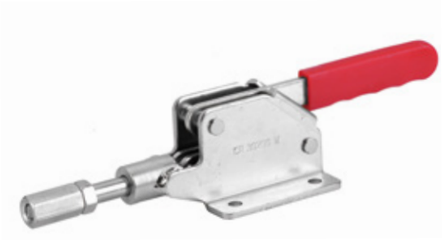

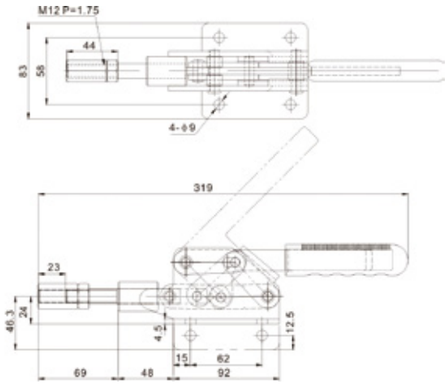

CH-36020

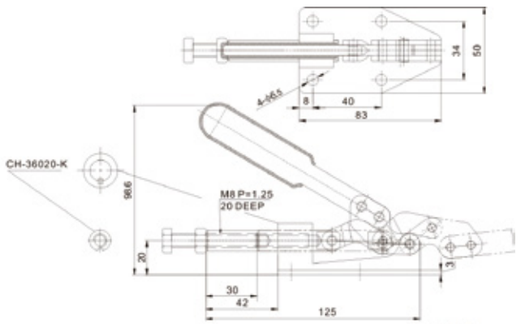

Unit:mm

MODEL	HOLDING CAPACITY(N)	WEIGHT(g)	SPINDLE SUPPLIED	HANDLE OPENS	PLUNGER STROKE(mm)	FLANGED BASE	STRAIGHT BASE
CH-302-DM(SS)	1600	454	-	45°	12	●	
CH-30282M	1600	454	-	45°	12		●
CH-30290M	2950	1270	-	45°	23	●	
CH-30292M	2950	1270	-	45°	23		●
CH-36020	1800	380	CH-SA-085012	144.5°	30	●	
CH-36020-K	1800	380	CH-SA-085012	144.5°	30	●	

Material : Steel .The product with(SS) mark is available also in stainless steel.

CH-31501

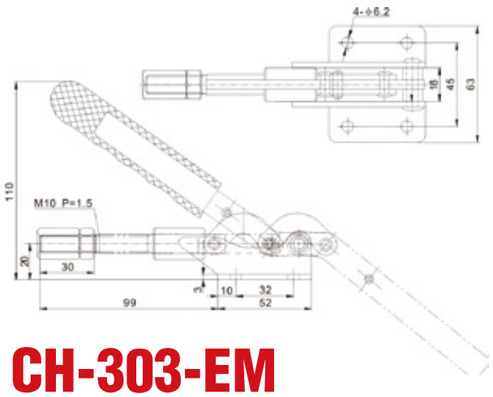

CH-303-EM

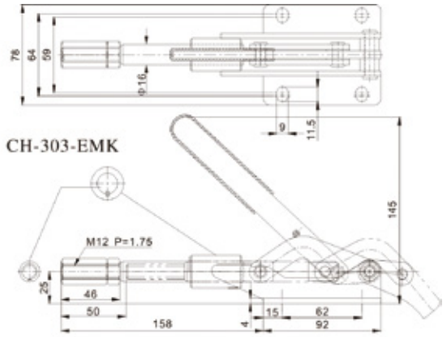

CH-30513

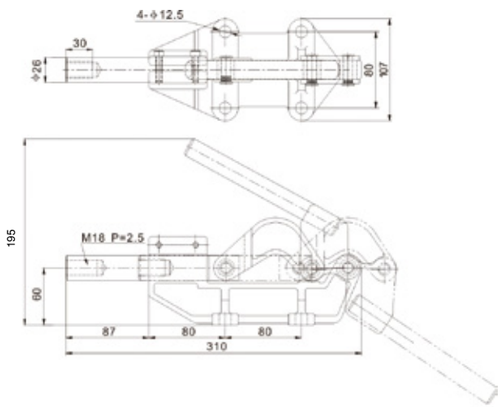

Unit:mm

MODEL	HOLDING CAPACITY(N)	WEIGHT(g)	SPINDLE SUPPLIED	HANDLE OPENS	PLUNGER STROKE(mm)
CH-31501	2000	380	-	190°	30
CH-303-EM	4540	965	-	190°	50
CH-303-EMK	4540	965	-	190°	50
CH-30513	16000	4200	CH-SA-185025	180°	76

Material : Steel.

LATCH TYPE CLAMPS

GRAPAS RÁPIDAS GANCHO

CH-431

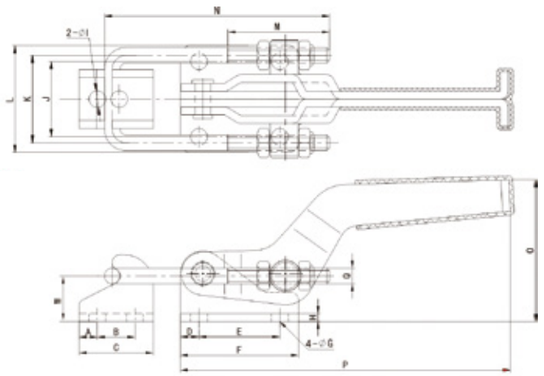

CH-40324

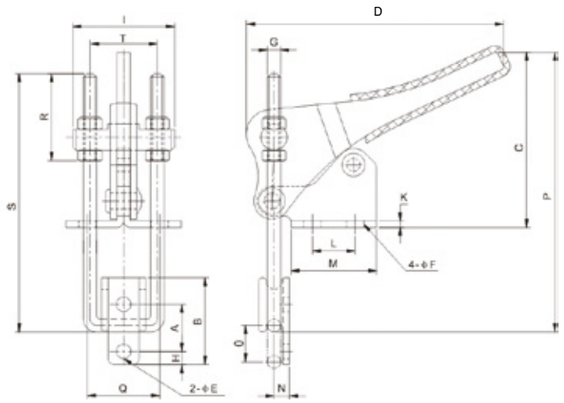

Unit:mm

MODEL	HOLDING CAPACITY(N)	WEIGHT(g)	A	B	C	D	E	F	Φ G	H	Φ I	J	K	L	M	N	O	P	Q	w
CH-40323(SS)	1630	70	5	10	20	5.2	15.9	26.2	4.4	2	4.4	19	19	28.2	24	57	29.3	75	M4 P=0.7	12
CH-431(SS)	3180	225	6.8	12	25.4	6.4	19	39.7	6.7	3	6.3	31.6	27	44.4	38	87	41.3	123.7	M5 P=0.8	12.2
CH-40341(SS)	9000	680	9.5	19.2	38.1	9.5	41.3	60.3	8.6	4	8.5	38.1	44.5	54	52	115	74	168.5	M8 P=1.25	23.2
Material : Steel .The product with(SS) mark is available also in stainless steel.																				

MODEL	HOLDING CAPACITY(N)	WEIGHT(g)	A	B	C	D	Φ E	Φ F	G	H	I	K	L	M	N	O	P	Q	R	S	T
CH-40324(SS)	2250	100	14.3	25.4	53.3	79	4.4	5.3	M4 P=0.7	4	31	2	13	26	4.7	11.1	85	22	26.5	78.5	20.5
CH-40334(SS)	4500	290	20.6	38.1	61.9	120	7.1	7.1	M6 P=1	7.1	41.3	3	19.1	33.3	8.7	17.5	108.5	25.4	40.5	114	28
CH-40344(SS)	9000	660	27	54	88.7	130.2	8.7	8.7	M8 P=1.25	9.5	60.3	4	31.8	47.6	12.7	28.6	150	36.5	58	154	44.5
Material : Steel .The product with(SS) mark is available also in stainless steel.																					

CH-40840

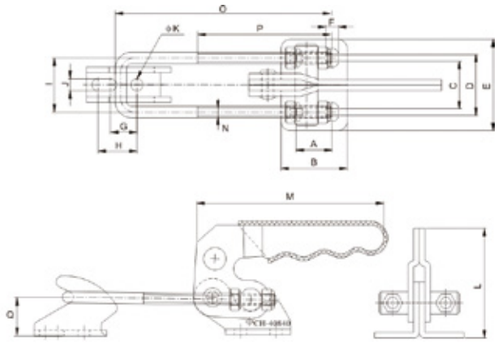

CH-43101

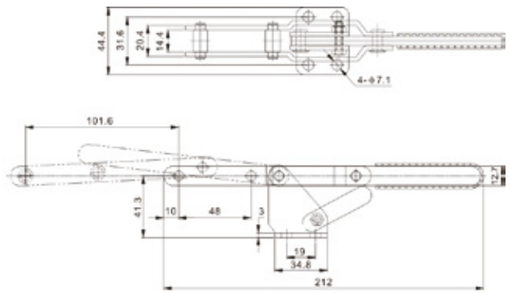

CH-40200

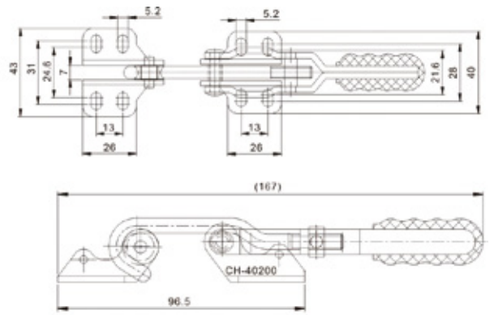

Unit:mm

MODEL	HOLDING CAPACITY(N)	WEIGHT(g)	A	B	C	D	E	F	G	H	I	j	Φ K	L	M	N	O	P	Q
CH-40820	2000	120	13	26	19	24	36	5.2	11	16	21	5.2	5.2	46	65	M4×0.7	92	55	12.9
CH-40840	2500	306	19	35	25	32	48	6.5	14	20.6	28	6.5	6.5	58	100	M6×1.0	114.5	60	20.7
CH-40870	7000	700	32	51	36	45	62	8.5	19	27	44.5	8.5	8.5	82	117	M8×1.25	152	60	24.2
CH-43101	1700	310																	
CH-40200	2000	155																	
Material : Steel .																			

CH-40702

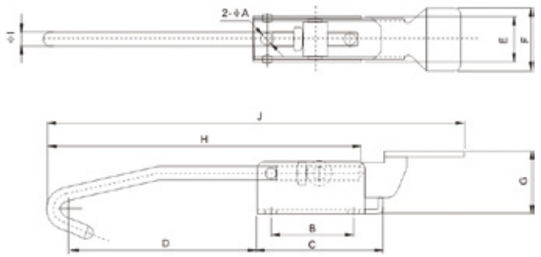

CH-452

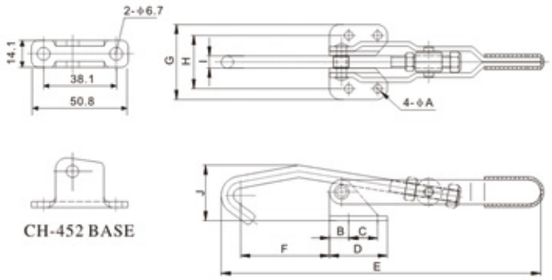

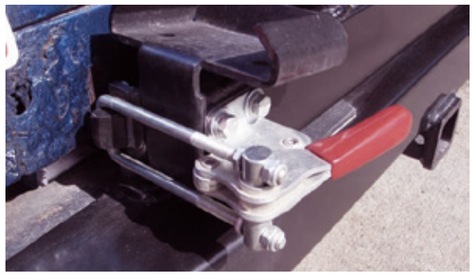

Unit:mm

MODEL	HOLDING CAPACITY(N)	WEIGHT(g)	Φ A	B	C	D	E	F	G	H	Φ I	J	FLANGED BASE	NARROW BASE
CH-40402(SS)	1500	130	6.5	36	85	86.8	20	28	23	140	6	183.7		
CH-40702(SS)	2000	290	6.7	44.5	73.2	79.9	31	40	32	151	8	206.5		
CH-451(SS)	1700	270	5.6	12.7	19	38.1	211	58.4	49.2	34.9	8	36.5	●	
CH-452(SS)	1700	255	6.7	-	38.1	50.8	211	44.7	-	-	8	36.5		●
CH-40371	3400	690	8.7	7.9	31.8	47.6	288	79.4	65.7	49.2	9.5	57.3	●	
CH-43810(SS)	4500	1130	10.3	12.7	28.6	54	336	76.2	85.7	60.3	12.7	68	●	

Material : Steel .The product with(SS) mark is available also in stainless steel.

CH-40370 AND CH-40370-LP

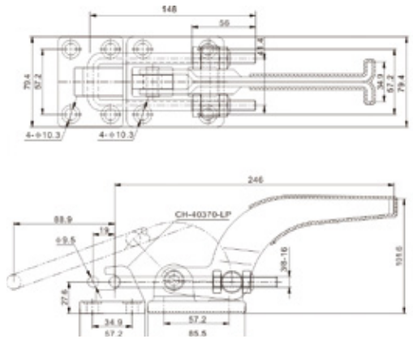

CH-40380 AND CH-40370-LP

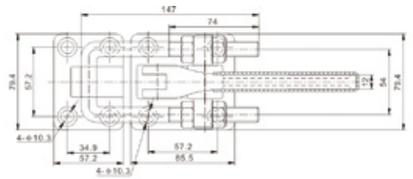

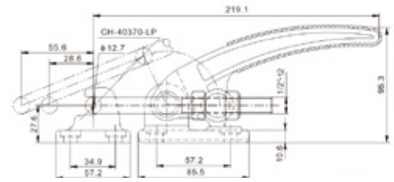

CH-40580

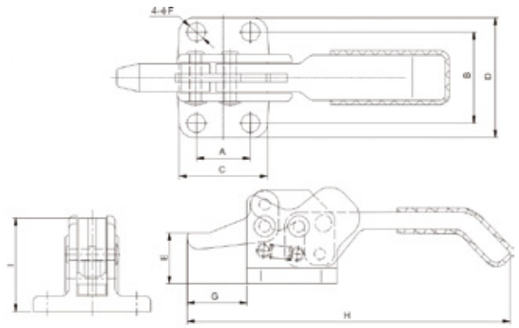

Unit:mm

MODEL	HOLDING CAPACITY(N)	WEIGHT(g)	A	B	C	D	E	Φ F	G	H	I
CH-40370	18180	1330									
CH-40380(SS)	34000	1590									
CH-40550	1000	200	19	32	31	42	17.5	6.5	22	116	33
CH-40580	2200	940	35	51	62	68	25	8.5	40	222	52.8

Material : Steel .The product with(SS) mark is available also in stainless steel.

CH-43110

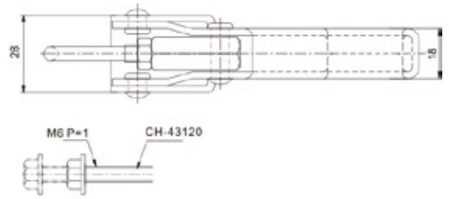

CH-43120

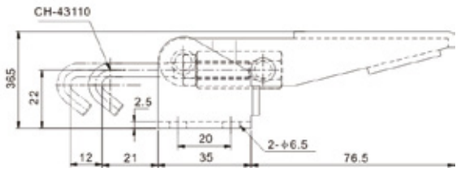

CH-43150

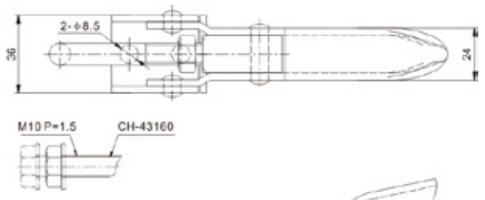

CH-43160

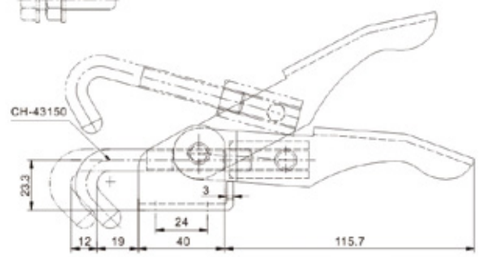

Unit:mm

MODEL	HOLDING CAPACITY(N)	WEIGHT(g)	SPINDLE SUPPLIED
CH-43110	1700	180	M6 P=1.0 hook bolt
CH-43120	1700	180	CH-SA-065010
CH-43150	3000	385	M10 P=1.5 hook bolt
CH-43160	3000	385	CH-SA-107515

Material : Steel .

TOGGLE PLIERS

PINZAS

CH-50350

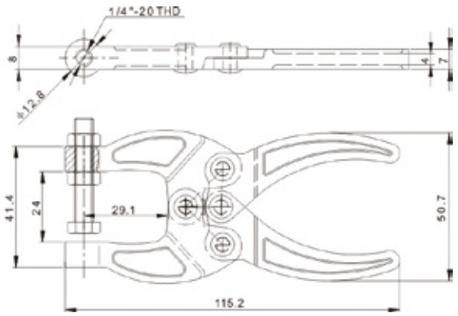

CH-50350-1

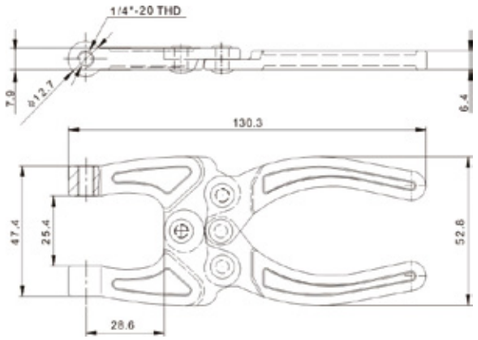

CH-50360

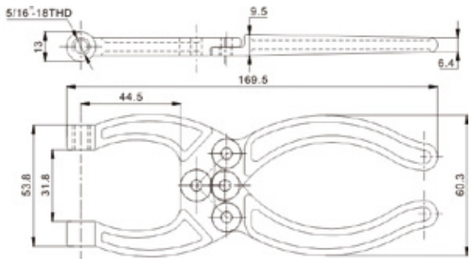

Unit:mm

MODEL	HOLDING CAPACITY(N)	WEIGHT(g)	SPINDLE SUPPLIED
CH-50350	800	179	CH-SA-14112
CH-50350-1	900	185	CH-SA-14112
CH-50360	1590	290	CH-SA-56200
Material : Steel .			

CH-50380

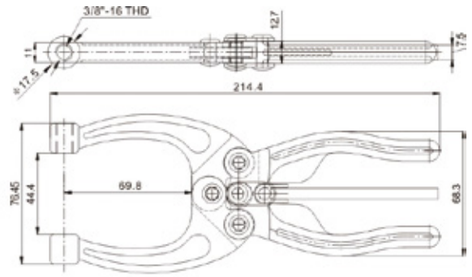

CH-50450

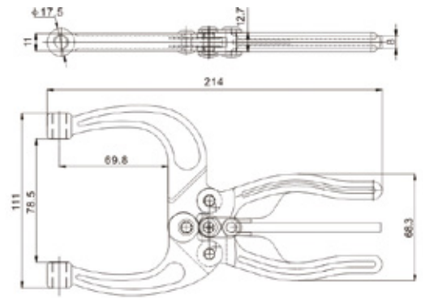

CH-50480

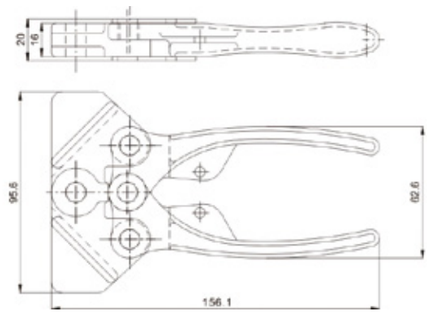

Unit:mm

MODEL	HOLDING CAPACITY(N)	WEIGHT(g)	SPINDLE SUPPLIED
CH-50380	3180	660	CH-SF-38300
CH-50450	3180	740	CH-SA-38300、CH-SF-38300
CH-50480	5000	600	_
Material : Steel .			

CH-50385

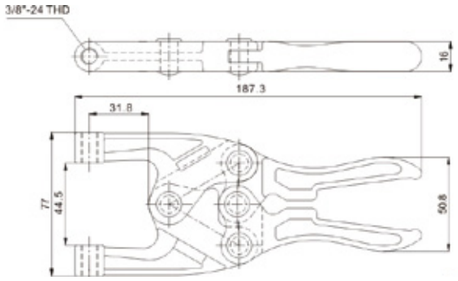

CH-51000

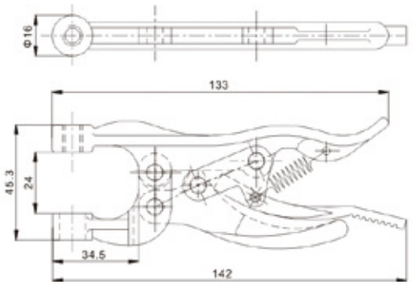

Unit:mm

MODEL	HOLDING CAPACITY(N)	WEIGHT(g)	SPINDLE SUPPLIED
CH-50385	8200	710	CH-SA-38114
CH-51000	2000	255	
Material : Steel .			

CH-51010

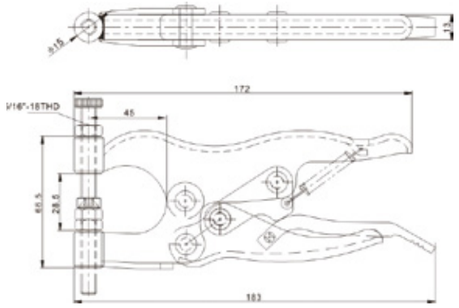

CH-51020

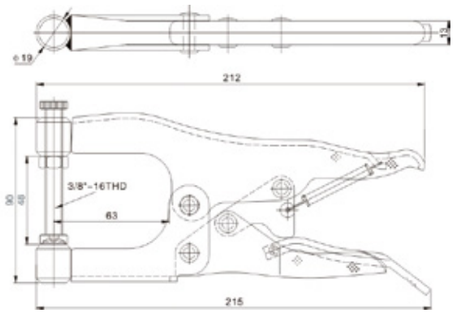

CH-51030

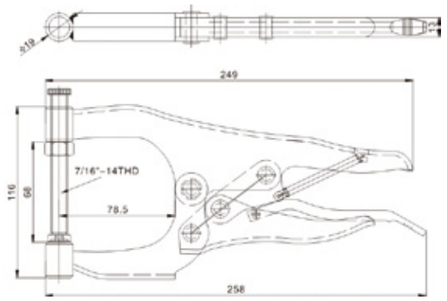

Unit:mm

MODEL	HOLDING CAPACITY(N)	WEIGHT(g)	BAR OPENS
CH-51010	2500	475	45°
CH-51020	3000	740	40°
CH-51030	2600	840	42°
Material : Steel .			

CH-51100

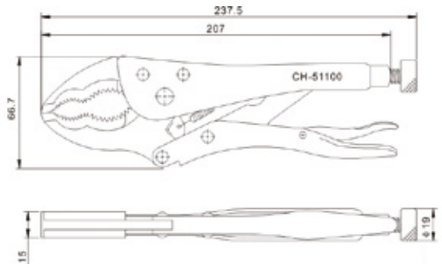

CH-51105

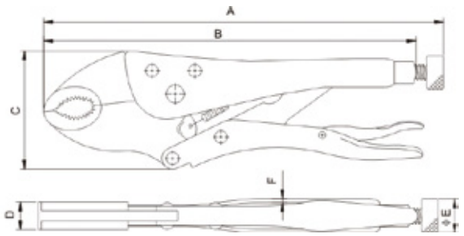

CH-51151

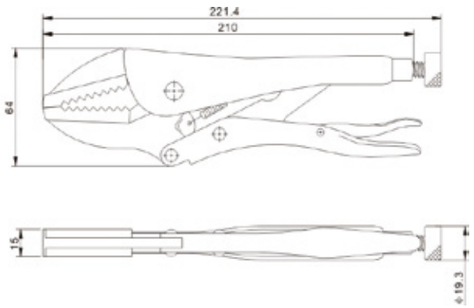

Unit:mm

MODEL	HOLDING CAPACITY(N)	WEIGHT(g)	A	B	C	D	Φ E	F
CH-51100	3500	850						
CH-51105	1020	180	143	130	42	9	13	2
CH-51150	3500	340	190	170	52.5	11	16.5	2
CH-51152	6000	520	225	211	63	11	19	2
CH-51151	5800	520						
Material : Steel .								

CH-51106

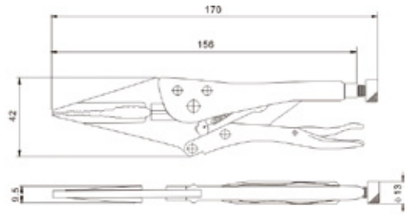

CH-51108

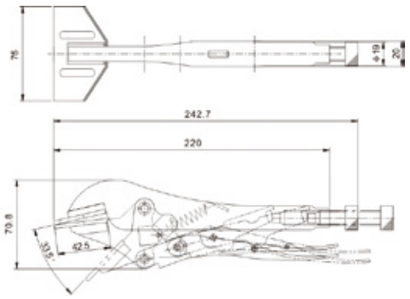

CH-51109

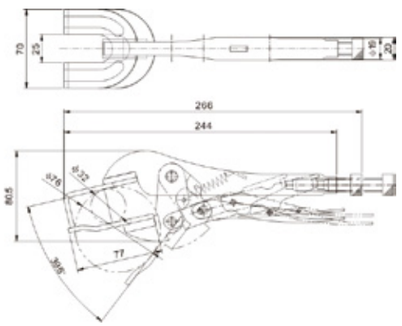

Unit:mm

MODEL	HOLDING CAPACITY(N)	WEIGHT(g)
CH-51106	1020	190
CH-51108	4540	698
CH-51109	2270	844
Material : Steel .		

CH-511SP

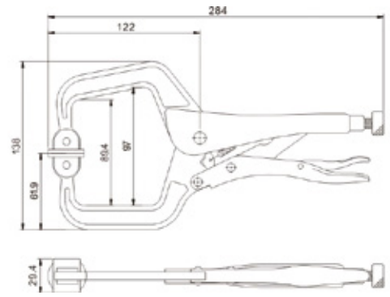

CH-51111

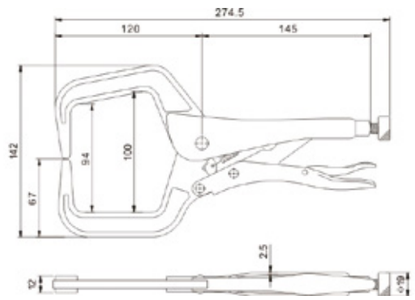

CH-60131

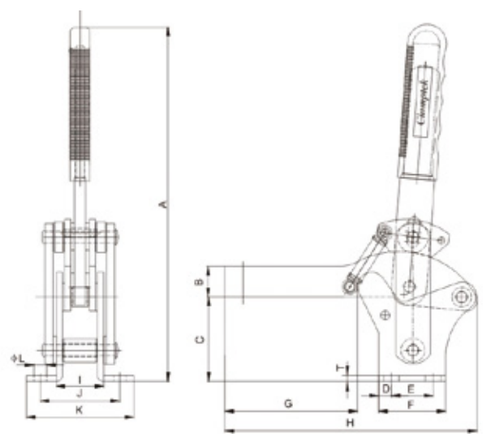

Unit:mm

MODEL	HOLDING CAPACITY(N)	WEIGHT(g)	SPINDLE SUPPLIED	BAR OPENS	HANDLE OPENS	A	B	C	D	E	F	G	H	I	J	K	ΦL	T
CH-511SP	3500	850																
CH-51111	3500	850																
CH-60130	2500	680	CH-SF-38300	70°	165°	220	19.5	39	6.5	22	35	68	118	20	48	62	Φ8.5	4
CH-60131	3500	1590	CH-SF-12400	85°	170°	250	22	60	9	30	48	95	178	25	57	77	Φ9	4.5

Material : Steel .

HEAVY DUTY WELDABLES

GRAPAS RÁPIDAS VERTICAL MODELO SOLDADURA

CH-70315

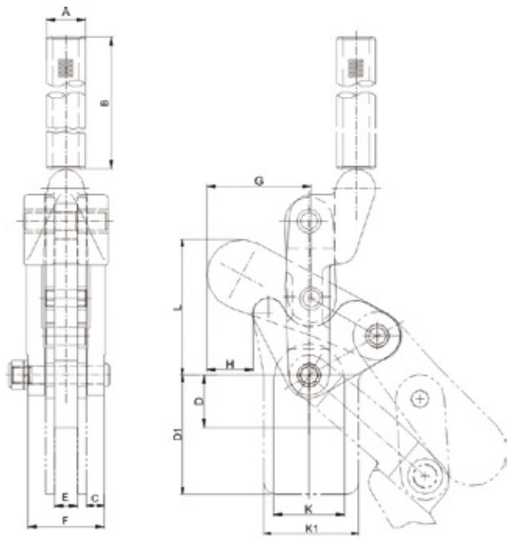

CH-70305

CH-70310

Unit:mm

MODEL	HOLDING CAPACITY(N)	WEIGHT(g)	BAR OPENS	HANDLE OPENS	Φ A	B	C	D	D1	E	F	G	H	K	K1	L
CH-70305	5000	790	214°	134°	17.5	125	6.7	_	_	10	31.8	40	15	_	_	51
CH-70310	5000	850	214°	134°	17.5	125	6.7	20	_	10	31.8	40	15	29	_	51
CH-70315	5000	940	214°	134°	17.5	125	6.7	_	50	10	31.8	40	15	_	45	51
CH-70505	10000	1355	206°	130°	22.2	125	9.6	_	_	12.3	40.3	57	26	_	_	73
CH-70510	10000	1490	206°	130°	22.2	125	9.6	28	_	12.3	40.3	57	26	38	_	73
CH-70515	10000	1590	206°	130°	22.2	125	9.6	_	63.5	12.3	40.3	57	26	_	51	73
CH-70605	20000	2550	206°	130°	27	125	10.3	_	_	16	48.6	74.3	33	_	_	91
CH-70610	20000	2870	206°	130°	27	125	10.3	33	_	16	48.6	74.3	33	51	_	91
CH-70615	20000	2990	206°	130°	27	125	10.3	_	76	16	48.6	74.3	33	_	63.5	91
Material : Steel .																

CH-75027

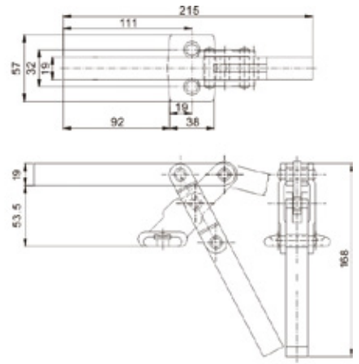

CH-75027-SM

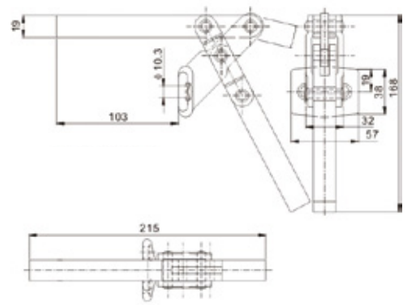

CH-75048

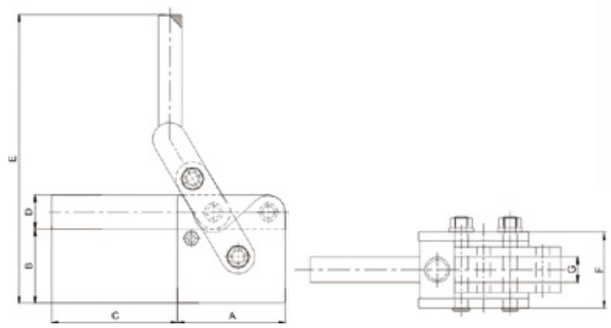

Unit:mm

MODEL	HOLDING CAPACITY(N)	WEIGHT(g)	HANDLE OPENS	BAR OPENS	A	B	C	D	E	F	G
CH-75027	1700	310	-	195°	-	-	-	-	-	-	-
CH-75027-SM	1700	310	-	195°	-	-	-	-	-	-	-
CH-75048	7000	2700	125°	190°	82.6	67.2	108.9	25.4	261	56	19
CH-75078	16000	4300	120°	185°	101.6	69.2	118.5	32	272	65.2	22
CH-75088	25000	6350	120°	185°	127	82.6	124.5	38	318	69.4	25.4
Material : Steel .											

CH-70300B

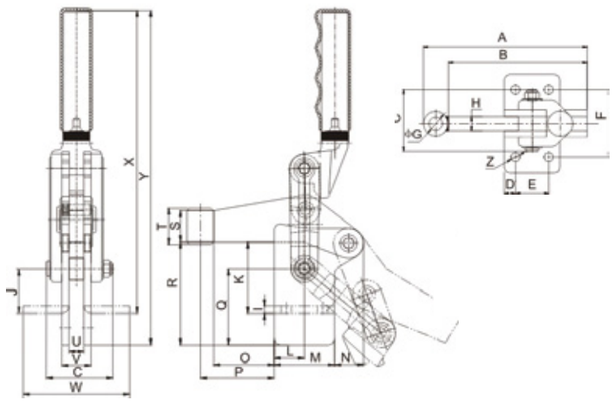

CH-70320

CH-70725

CH-70720

Unit:mm

MODEL	HOLDING CAPACITY(N)	WEIGHT(g)	BAR OPENS	HANDLE OPENS	A	B	C	D	E	F	G	ΦH	I	J	K	L	M	N	O	P	Q	R	S	T	U	V	W	X	Y	ΦZ
CH-70320	3000	290	210°	134°	84	-	27	-	-	-	6.5	-	-	-	-	15	20	12	45	-	28	42	15	-	6	12	-	-	136	-
CH-70300T	3000	250	210°	134°	29	14	10	12	27	6	6	16	20	32	-	27	107	-	28	15										
CH-70300B	3000	310	34°~130°	45°~92°	84	-	27	6	19	32	6.5	-	5	13	27.2	15	33	8	45	-	-	-	15	-	-	-	42	122	-	6.5
CH-70720	7000	1180	205°	130°	-	105	51	10	25	-	12.2	10	5	-	-	25	45	20	40	-	50	70	22	30	10	20	-	-	239	8.3
CH-70725	7000	1250	180°	120°	127	105	51	10	25	50	12.2	10	5	28.8	50	25	45	20	40	51	-	-	22	30	-	-	67	215	-	8.3
CH-71220	12000	1930	195°	130°	-	124	58	10	30	-	12.2	12	6	-	-	25	50	24	50	-	63	85	26	30	12	24	-	-	280	8.3
CH-71225	12000	2110	180°	125°	146	124	58	10	30	60	12.2	12	6	36	58	25	50	24	50	61	-	-	26	30	-	-	88	251	-	8.3
CH-72420	24000	3750	195°	130°	-	158	66	12	40	-	16.3	16	-	-	-	40	63	35	60	75	76	105	32	38	16	32	-	-	318	-
CH-72425	24000	4100	195°	130°	188	158	66	12	40	75	16.3	16	8	46	75	40	63	35	60	75	-	-	32	38	-	-	105	295	-	10.3

Material : Steel .

CH-70710

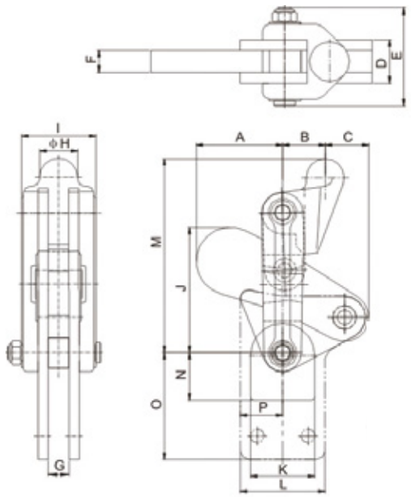

CH-70715

Unit:mm

MODEL	HOLDING CAPACITY(N)	WEIGHT(g)	BAR OPENS	HANDLE OPENS	A	B	C	D	E	F	G	ΦH	I	J	K	L	M	N	O	P
CH-70710	7000	700	205°	130°	40	23	16	20	51	10	10	20	38	52	29	-	94	20	-	-
CH-70715	7000	800	205°	130°	40	23	16	20	51	10	10	20	38	52	-	45	94	-	50	25
CH-71210	12000	1720	195°	130°	51	25	24	24	58	12	12	22	45	81	38	-	113	28	-	-
CH-71215	12000	1880	195°	130°	51	25	24	24	58	12	12	22	45	81	-	50	113	-	63	25
CH-72410	24000	2900	195°	130°	72	32	26	32	66	16	16	30	53	91	52	-	144	33	-	-
CH-72415	24000	3200	195°	130°	72	32	26	32	66	16	16	30	53	91	-	63	144	-	78.5	40

Material : Steel .

CH-70200A

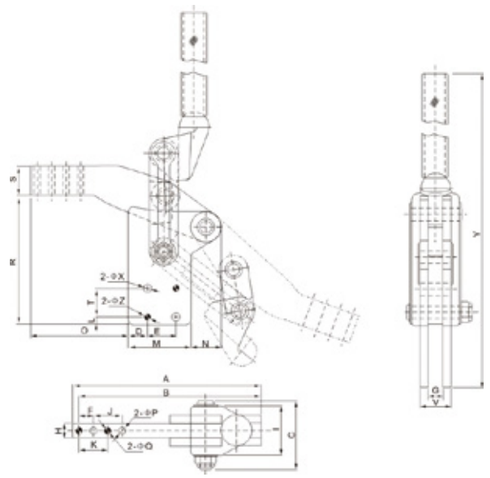

CH-70200B

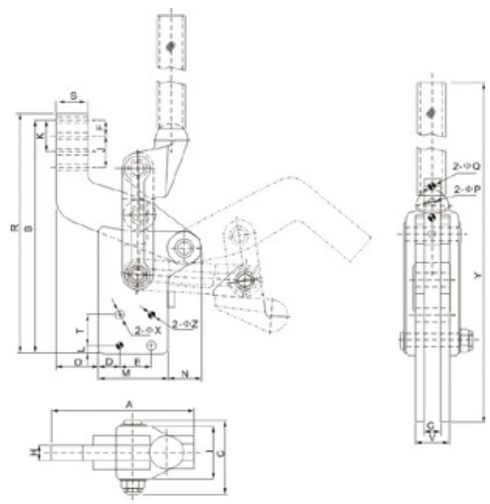

Unit:mm

MODEL	HOLDING CAPACITY(N)	WEIGHT(g)	BAR OPENS	HANDLE OPENS	A	B	C	D	E	F	G	ΦH	I	J	K	L	M	N	O	ΦP	ΦQ	R	S	T	V	ΦX	Y	ΦZ
CH-70200A	2500	300	200°	128°	90.2	84	27	5.9	15	7.5	6	15	19	15	15	5	26.8	8.1	55.3	5.5	4	45	15	15	12	5.5	154	4
CH-70730A	7000	1280	200°	128°	141	133	48	10.5	24	15	10	15	35	30	30	10	45	20	75.7	7	6	80	20	19	20	9	239	6
CH-71230A	12000	2120	200°	128°	172.5	164.5	55	11.3	30	15	12	15	41.8	30	30	8	52.8	23	96.7	7	6	104	30	30	24	9	277.5	6
CH-72430A	24000	3780	200°	128°	198.5	192	67.5	20	30	15	16	16	52	30	30	7.5	65.5	31.5	101.5	7	6	134.5	30	30	32	9	343	6
CH-70200B	2500	300	130°	92°	53	95.1	27	5.9	15	7.5	6	15	19	15	15	5	26.8	8.1	18.1	5.5	4	101.3	15	15	12	5.5	154	4
CH-70730B	7000	1280	130°	92°	81	158	48	10.5	24	15	10	15	35	30	30	10	45	20	15.7	7	6	166	20	19	20	9	239	6
CH-71230B	12000	2120	130°	92°	109.5	196	55	11.3	30	15	12	15	41.8	30	30	8	52.8	23	33.7	7	6	203.5	30	30	24	9	277.5	6
CH-72430B	24000	3780	130°	92°	137	223.5	67.5	20	30	15	16	16	52	30	30	7.5	65.5	31.5	40	7	6	230	30	30	32	9	343	6

Material : Steel .

CH-701-C

CH-702-C

CH-70101

CH-70203

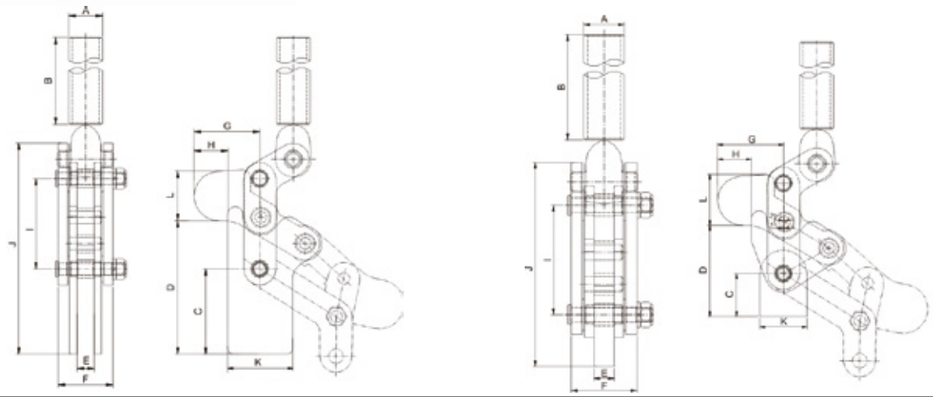

Unit:mm

MODEL	HOLDING CAPACITY(N)	WEIGHT(g)	BAR OPENS	HANDLE OPENS	ΦA	B	C	D	E	F	G	H	I	J	K	ΦL
CH-702-C	2000	680	194°	123°	17.3	152.4	23.8	48	8	31.8	40	17	50.8	93	26	28
CH-70201	2000	680	194°	123°	17.3	152.4	23.8	48	8	31.8	40	17	50.8	93	26	28
CH-702-D	5000	1560	191°	122°	21.7	152.4	33.7	69	13	42	51	26	70	132	36.4	39
CH-70203	5000	1480	191°	122°	21.7	152.4	33.7	69	13	42	51	26	70	132	36.4	39
CH-702-K	10000	2550	197°	128°	27.2	152.4	37.2	84	16	46	59	26.7	90	161	50	50.5
CH-701-C	2000	740	194°	123°	17.3	152.4	50	75	8	31.8	40	17	50.8	121	44.5	28
CH-70101	2000	700	194°	123°	17.3	152.4	50	75	8	31.8	40	17	50.8	121	44.5	28
CH-701-D	5000	1680	191°	122°	21.7	152.4	66.8	102	13	42	51	26	70	165	50	39
CH-70103	5000	1590	191°	122°	21.7	152.4	66.8	102	13	42	51	26	70	165	50	39
CH-701-K	10000	2650	197°	128°	27.2	152.4	80	123	16	46	59	26.7	90	202	63	50.5

Material : Steel .

CH-80070

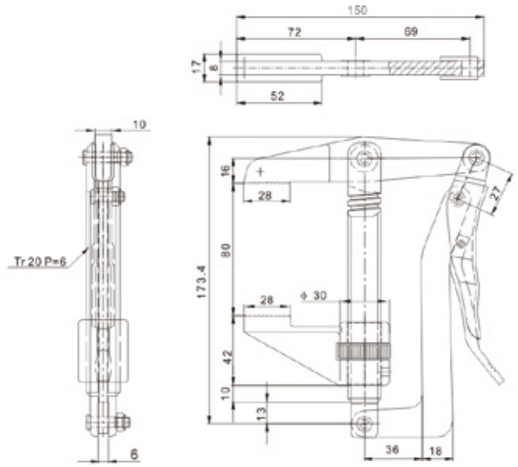

CH-80379

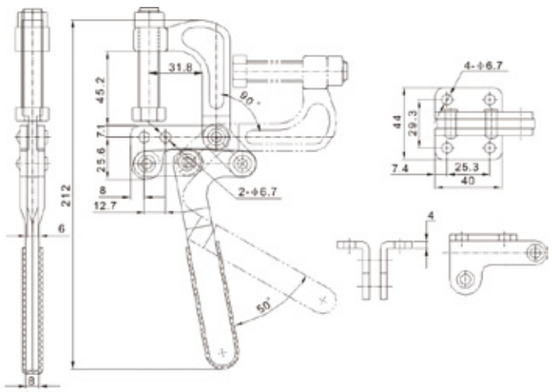

Unit:mm

MODEL	HOLDING CAPACITY(N)	WEIGHT(g)	SCREW STROKE(mm)	SPINDLE SUPPLIED	JAW OPENS
CH-80070	2000	1032	85	_	_
CH-80325(SS)	3400	500	_	CH-SA-12212	90°
CH-80379(SS)	3400	500	_	CH-SA-12212	90°

Material : Steel .The product with(SS) mark is available also in stainless steel.

For other type and item of F CLAMP , is available also under request.
Usted puede conseguir otros tipos y modelos de APRETADOR EN TIPO F en bajo de pedido.

SHALLOW THROAT C CLAMPS

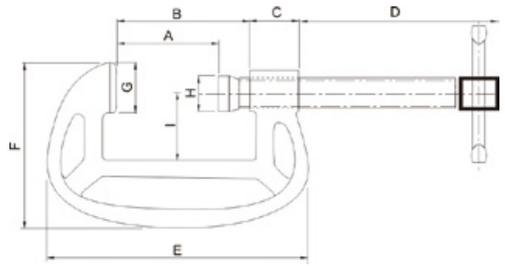

DEEP THROAT C CLAMPS

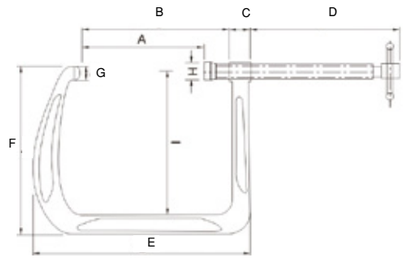

SHALLOW THROAT C CLAMPS

Unit:mm

MODEL	SIZE	WEIGHT(g)	A	B	C	D	E	F	G	H	I
M25	1"	200	25.5	36	20	49	80	58	20	Φ16	24.5
M38	1-1/2 "	290	39	50	20	69	97	68	20	Φ16	31
M50	2"	450	45.8	66	21.6	87.8	120	70.5	22.2	Φ15.8	31.3
M75	3"	1250	69.7	85.3	27	107.4	148.4	83.7	27.4	Φ19	40
M100	4"	1400	98.2	117.5	32.4	143	192.2	106	31.5	Φ22.2	51.5
M125	5"	2170	118.7	140	36.7	176.4	225	122.5	35.5	Φ25.5	60.8
M150	6"	3170	141.4	175	40	198.8	270	137.8	41.5	Φ25.5	72.3
M200	8 "	4550	185.2	209.5	44	239.8	323	174.4	41.7	Φ28	96
M250	10"	6100	243.5	270	44.5	330	380	203	43	Φ28	124
M300	12 "	9000	290	320	55	360	455	223	50	Φ35	130

Material : Steel.

DEEP THROAT C CLAMPS

MODEL	SIZE	WEIGHT(g)	A	B	C	D	E	F	G	H	I
M50	2 "	320	53	64.5	20.5	83	115	95	22.5	Φ16	59
M75	3 "	1300	70	91.5	23.5	103	155	125	25	Φ22.2	80.5
M100	4 "	2050	105	131.5	31	145	216	178	28	Φ25.5	117
M150	6 "	3170	150	172	31	196	270	220	33	Φ30	160

Material : Steel.

CH-10247-A

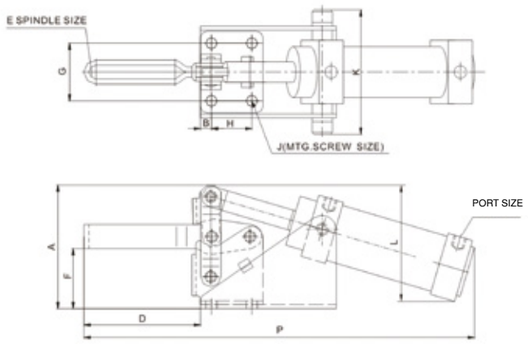

CH-10101-A

CH-12050-A

CH-12265-A

CH-12132-A

Unit:mm

MODEL	CYLINDER INSIDE DIAMETER(mm)	CYLINDER AREA(cm²)	MAXIMUM CYLINDER AIR PRESSURE(bar)(Psi)		HOLDING CAPACITY(N)	WEIGHT(g)	BAR OPENS	PORT SIZE	P	A	B	D	E	F	G	H	J	K	L
CH-10101-A	20	3.14	10	140	500	280	82°	G1/8"	170	47.7	4.8	25.7	CH-FC-10138	21	23.8	15.9	4.5	52	55
CH-12050-(U)A	32	7.07	10	140	910	620	92°	G1/8"	185	57	6.3	35	CH-FC-14134	25.7	27	12.7	5.2	69	51
CH-12130-A	32	7.07	10	140	2270	900	92°	G1/8"	246	75.4	11	68	CH-FC-56212	34.8	31.8	19	7.1	74	73
CH-12132-A	32	7.07	10	140	2270	900	92°	G1/8"	270	75.4	11	92.6	CH-FC-56212	34.8	31.8	19	7.1	74	73
CH-12265-A	40	12.56	10	140	3400	1640	86°	G1/8"	302	97	8.7	92	CH-FC-38312	47.2	45.2	31.8	8.7	98	92
CH-12275-A	40	12.56	10	140	3400	1800	86°	G1/8"	308	97	8.7	91	CH-FC-38312	47.2	45.2	31.8	8.7	98	92
CH-10247-A	50	19.63	10	140	4500	3620	95°	G1/8"	407	112	9.5	125.4	CH-SA-12300	56.1	45.2	31.8	8.7	112	104
CH-10249-A	50	19.63	10	140	4500	3640	95°	G1/8"	407	112	9.5	125.4	CH-SA-12300	56.1	45.2	31.8	8.7	112	104

Material : Steel.

CH-20820-A

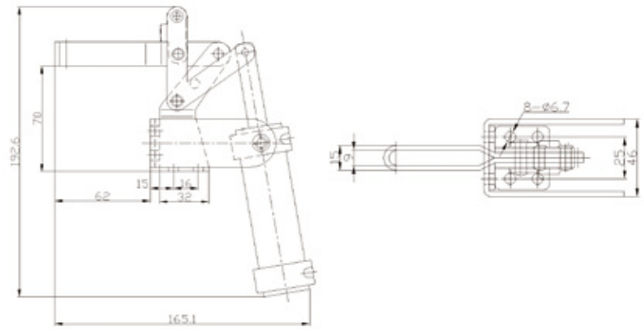

CH-20830-A

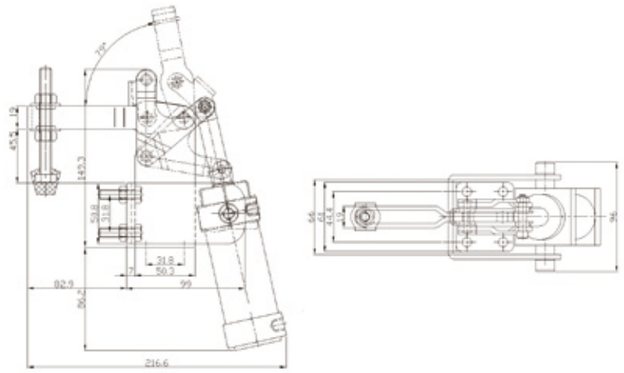

CH-702-DA

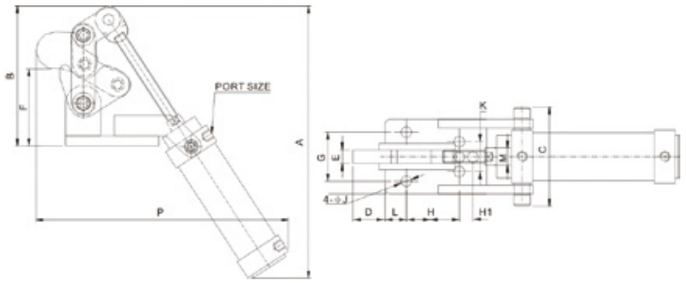

Unit:mm

MODEL	CYLINDER INSIDE DIAMETER(mm)	CYLINDER AREA(cm²)	MAXIMUM CYLINDER AIR PRESSURE(bar)(Psi)		HOLDING CAPACITY(N)	WEIGHT(g)	BAR OPENS	PORT SIZE	SPINDLE SUPPLIED
CH-20820-A	32	7.07	10	140	1000	1000	80°	G1/8"	CH-FC-56212
CH-20830-A	40	12.56	10	140	3400	2060	79°	G1/8"	CH-FC-38312

MODEL	CYLINDER INSIDE DIAMETER(mm)	CYLINDER AREA(cm²)	MAXIMUM CYLINDER AIR PRESSURE(bar)(Psi)		HOLDING CAPACITY(N)	WEIGHT(g)	BAR OPENS	PORT SIZE	P	A	B	C	D	E	F	ΦJ	M	G	H	H1	K	L
CH-702-CA	32	7.07	10	140	2000	1140	65°	G1/8"	236	158	103	80	27	8	56.4	8.5	12	38	35	20	-	15
CH-702-DA	40	12.56	10	140	5000	3015	72°	G1/8"	263	277	142	93	34	13	81	11	16	46	50	-	28	20
CH-702-KA	63	31	10	140	10000	6250	80°	G3/8"	416	360	175	126	33	16	90.4	12.4	20	60	65	45	50	20

Material : Steel.

CH-36301-A

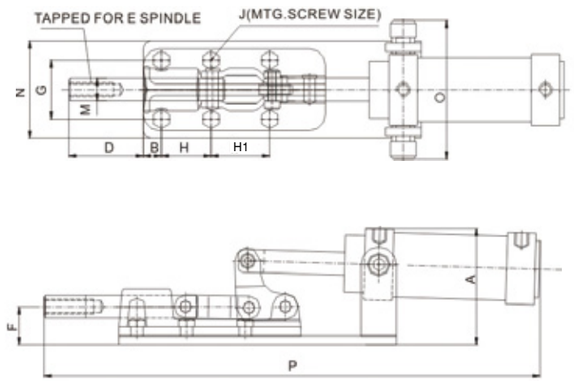

CH-36003-A

CH-36330-A

CH-305-EA

Unit:mm

MODEL	CYLINDER INSIDE DIAMETER(mm)	CYLINDER AREA(cm²)	MAXIMUM CYLINDER AIR PRESSURE(bar)(Psi)		HOLDING CAPACITY(N)	WEIGHT(g)	PLUNGER STROKE(mm)	PORT SIZE	P	A	B	D	E	F	G	H	H1	J	M	N	O
CH-36301-A	20	3.14	10	140	450	280	7.5	G1/8"	189	40	7.4	35.2	CH-SA-042007	14.7	15.9	15.9	-	4.4	6.4	34	51
CH-36003-A	32	7.07	10	140	2720	960	19.7	G1/8"	259.3	69.5	10.8	54.5	CH-SA-085012	27.7	33.3	36.5	-	5.6	11.1	56	70
CH-36330-A	40	12.56	10	140	11360	2570	28	G1/8"	347	84	12.7	51.5	CH-SA-105015	26.6	41.3	34.9	41.3	8.7	15.9	68	97
CH-305-EA	32	7.07	10	140	3860	1540	23.6	G1/8"	310.8	75.8	8.9	75	CH-SA-105015	37.8	41.3	41.3	-	8.3	15.9	57.2	74

Material : Steel.

CH-32500HL-A

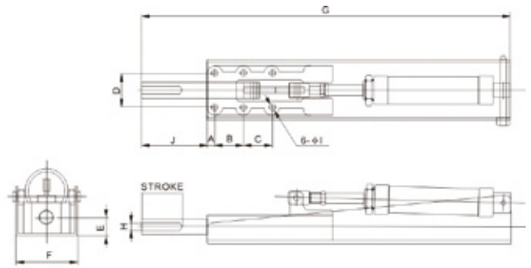

CH-30600PR-A

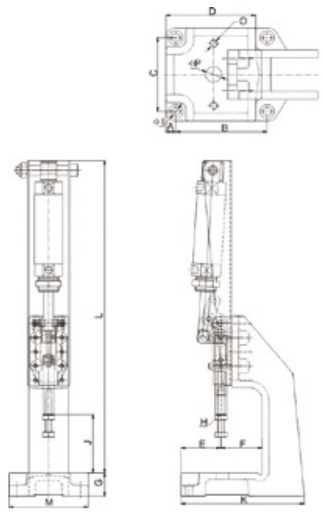

Unit:mm

MODEL	CYLINDER INSIDE DIAMETER(mm)	CYLINDER AREA(cm2)	MAXIMUM CYLINDER AIR PRESSURE(bar)(Psi)		HOLDING CAPACITY(N)	WEIGHT(g)	SPINDLE SUPPLIED	PLUNGER STROKE(mm)	A	B	C	D	E	F	G	H	ΦI	J	k	L	M	ΦP	O
CH-30600HL-A	32	7.07	10	140	6000	1540	CH-SA-086512	25	25	36.5	-	33.6	14	59	325	M8 P=1.25	5.5	38	-	-	-	-	-
CH-31200HL-A	40	12.56	10	140	12000	3900	CH-SA-107515	32	8	35	41	41	21	76	435	M10 P=1.5	8.5	55	-	-	-	-	-
CH-32500HL-A	40	12.56	10	140	25000	7730	CH-SA-127517	50	12	45	45	54	26	96	577	M12 P=1.75	10.3	102	-	-	-	-	-
CH-30600PR-A	32	7.07	10	140	6000	4570	CH-SA-086512	25	10	95	80	94	48	52	30	M8 P=1.25	9	75	150	432	100	15.6	M8*1.25
CH-31200PR-A	40	12.56	10	140	12000	10890	CH-SA-107515	32	12.5	115	95	113	57	63	40	M10 P=1.5	11	100	203	534	120	20	M10*1.5
CH-32500PR-A	40	12.56	10	140	25000	22160	CH-SA-127517	50	12.5	145	125	139	71	79	50	M12 P=1.75	11	120	238	748	150	30	M10*1.5

Material : Steel.

HYDRAULIC & PNEUMATIC CLAMPING TECHNOLOGY

TECNOLOGIA DE SISTEMA DE SUJECIÓN HIDRÁULICO & NEUMÁTICO

THEORETICAL CLAMPING FORCE CALCULATION FORMULA

CÁLCULO DE LA FUERZA TEÓRICA

PNEUMATIC & HYDRAULIC CLAMPS FORCE CALCULATION FORMULA

CÁLCULO DE LA FUERZA TEÓRICA DE SISTEMA DE SUJECIÓN HIDRÁULICO Y NEUMÁTICA

Push F=P×A Pull F=P×(A-a)

F:Push - pull force(KN)

P: Operating pressure(bar)

A1:Piston force area (cm^2)

a: Piston rod area (cm^2)

Fuerza de empuje F=P×A

Fuerza de tracción F=P×(A-a)

F: Fuerza de sujeción (KN)

P: Presión utilizado (bar)

A1: Área de la fuerza sujeta al pistón (cm^2)

a: Área de diámetro de la varilla de pistón (cm^2)

Work clamps,the practical clamping force is 60%-70% of theoretical clamping force.

En cuanto de la fuerza de los grapas de actuación, se puede utilizar el resultado del cálculo mencionado multiplicado por el factor de seguridad (en general, recomendamos que la fuerza producida sea el 60% 70% de la teórica)

SWING CLAMPING FORCE CALCULATION FORMULA

CÁLCULO DE FUERZA DE SUJECIÓN TEÓRICA (GARRA GIRATORIA)

F =P×A2 =P×(A1- a)

F: Swing clamp force(KN)

P: Operating pressure(bar)

A1: piston force area (cm^2)

a: Piston rod area (cm^2)

A2 Piston pull force area (cm^2)

F=P×A2=P×(A1-a)

F: Fuerza de sujeción (KN)

P: Presión utilizado (bar)

A1: Área de la fuerza sujeta al pistón (cm^2)

a: Área de diámetro de la varilla de pistón (cm^2)

A2: Área de la fuerza sujeta al extremo tirado de pistón (cm^2)

LEVERAGE CLAMP FORCE CALCULATION FORMULA

CÁLCULO DE FUERZA DE SUJECIÓN TEÓRICA (GRAPA DEL TIPO PALANCA)

F=P×A×L1÷L2

F:Leverage clamp force(KN)

P: Operating pressure(bar)

A1: piston force area(cm^2)

L1:The distance between piston rod centre point and leverage point (mm)

L2:The distance between Leverage point and clamp arm clamp point (mm)

F=P×A×L1÷L2

F: Fuerza de sujeción (KN)

P: Presión utilizado (bar)

A: Área de la fuerza sujeta al pistón (cm^2)

L1: Distancia del centro de pistón al punto de soporte del palanca(mm)

L2: Distancia del punto de soporte del palanca al punto de brazo (mm)

PRESSURE CONVERSION TABLE

TABLA DE INTERCAMBIO DE PRESIÓN

	Pa	bar	kgf/cm²	atm	at	Torr	mmH₂O	mmHg	Psi
1 Pa	1	0.00001	0.00001	0.00001	0.00001	0.0075	0.10197	0.0075	0.00014
1 bar	100000	1	1.01972	0.9869	1.01972	750.062	10.1972	750.062	14.504
1 Kgf/cm²	98066.5	0.98067	1	0.9678	1	735.6	10	735.6	14.22
1 atm	101325	1.01325	1.033	1	1.033	760	10.332	760	14.7
1 at	98067	0.98067	1	0.9678	1	735.6	10	735.6	14.22
1 Torr	133.3	0.00133	0.00136	0.00132	0.00136	1	13.6	1	0.01934
1 mmH₂O	9.8067	0.000098	0.0001	0.0000968	0.0001	0.07356	1	0.07356	0.00142
1 mmHg	133.322	0.00133	0.00136	0.00132	0.00136	1	13.5951	1	0.01934
1 Psi	6894.76	0.06895	0.07031	0.06805	0.07031	51.7149	703.07	51.7149	1

Note:The swing direction is indicate the clamps under pressure .

Nota: La dirección de la Garra giratoria se refiere a la presionar hacia abajo.

PNEUMATIC CLAMPING SYSTEM

SISTEMA DE SUJECIÓN NEUMÁTICA

CPLCU-PNEUMATIC LEVERAGE CLAMP CPLCU-GRAPA NEUMÁTICA DE TIPO PALANCA

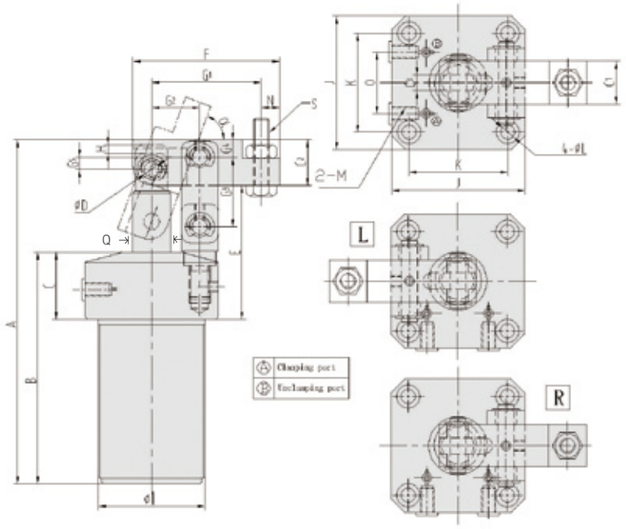

FEATURES

Body material:Aluminum alloy 6061T6 hard coat.Piston rod:S45C, Hard Chromed.
Use high-quality seal to avoid leakage and keep long operation.
Leverage structure design, the fixture can clamp easily, perform efficiently.

CARACTERÍSTICAS

Material del cuerpo: Aleación de aluminio 6061T6 recubrimiento duro. Pistón: S45C, Cromado duro.
Use sello de alta calidad para evitar fugas y mantener un largo funcionamiento.
Diseño de estructura de palanca, el aparato puede sujetar fácilmente y realizarlo de manera eficiente.

Max:operating pressure 7 bar
Min: operating pressure 4 bar
Double acting

Presión máx. de funcionamiento: 7 bares
Presión min. de funcionamiento: 4 bares
Doble efecto

NOTE

When you need to increase the length of the clamping arm, please don't exceed 1.5 times of the original length.

NOTA

Cuando usted necesite incrementar la longitud del brazo de sujeción, por favor, no exceda de 1.5 veces de la longitud original.

ORDERING INDICATION MÉTODO DE ETIQUETADO DEL PEDIDO

CPLCU – 40 R

CPLCU	Series	CPLCU
40	Cylinder inside diameter	ϕ25,ϕ32,ϕ40,ϕ50,ϕ63
R	Lever arm direction	R,L,Blank

MODEL	CLAMPING FORCE AT 7 bar (KN)	CLAMPING STROKE(mm)	TOTAL STROKE(mm)	CYLINDER CAPACITY CLAMP(cm^3)	CYLINDER CAPACITY UNCLAMP(cm^3)	EFF.PISTON AREA CLAMP(cm^2)	EFF.PISTON AREA UNCLAMP(cm^2)	RANGE OF TEMPERATURE(°C)
CPLCU-25	0.27	20	24	11.78	8.09	4.91	3.37	-10~+60°C
CPLCU-32	0.42	28	31	24.92	18.69	8.04	6.03	-10~+60°C
CPLCU-40	0.67	30	33	41.45	34.82	12.56	10.55	-10~+60°C
CPLCU-50	1.07	30	33	64.78	54.42	19.63	16.49	-10~+60°C
CPLCU-63	1.70	30	33	102.83	92.47	31.16	28.02	-10~+60°C

Unit:mm

MODEL	A	B	C	C1	C2	C3	ΦD	E	F	G1	G2	G3	G4	G5	H	I	J	K	L	M	N	O	Q	S	α
CPLCU-25	128.5	86.5	25	16	17	6	ϕ6	50	55	41	18	26	6.5	4.5	2	M40×1.5	50	37	ϕ5.5-ϕ9×5.5D	M5	7	23	ϕ14	M6	70°
CPLCU-32	149.5	97.5	25	18	20	8	ϕ6	57	68	52	22	33	8	5	4	M50×1.5	60	45	ϕ6.5-ϕ11×6.5D	PT1/8	8	23	ϕ16	M8	75°
CPLCU-40	157.5	97.5	25	20	25	8	ϕ8	60	75	56	24	33	13	4	3	M55×1.5	65	50	ϕ6.5-ϕ11×6.5D	PT1/8	10	26	ϕ16	M8	78°
CPLCU-50	174	104	25	22	30	10	ϕ10	65	87.5	63.5	27.5	44	11	10	3	M65×1.5	75	58	ϕ8.5-ϕ14×8.5D	PT1/8	14	32	ϕ20	M12	70°
CPLCU-63	179	105	25	22	30	10	ϕ10	69	98	74	32	48	11	10	3	M80×1.5	90	70	ϕ8.5-ϕ14×8.5D	PT1/8	14	35	ϕ20	M12	60°

CALC-PNEUMATIC LEVERAGE CLAMP CALC-GRAPA NEUMÁTICA DE TIPO PALANCA

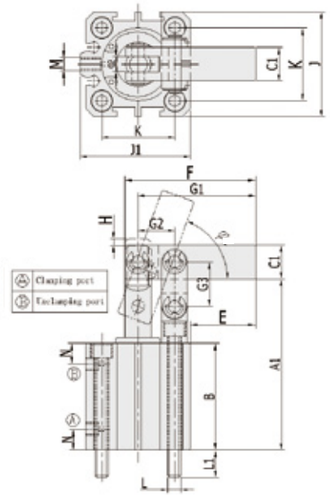

FEATURES

Applied Standardized fixture pneumaitc clamp in this series of product, and fitted with lever type holding structure.
Piston push out for clamping. Main spare parts of this product be installed outside of the body for convenient maintenance
The material of body is aluminum alloy. The surface of internal is smooth, and have long service life.
Clamping spare parts material is carbon steel which used for mechanical configuration, firm and wear-resistance.
All models of this series equiped with magnetic induction are available.

CARACTERÍSTICAS

Aplicado al cilindro de fijación estandarizada de esta serie productos, y equipado con estructura de sujeción tipo palanca.
Pistón de empuje hacia afuera para sujetar. Las piezas de repuestos principales se instalarán fuera del cuerpo para un mantenimiento conveniente.
El material del cuerpo es de aleación de aluminio. La superficie interna es lisa, y tienen una larga vida útil.
La sujeción de material de repuestos es de acero al carbono utilizado para la configuración mecánica, firme y resistente al desgaste.
Todos los modelos de esta serie están equipadas con inducción magnética.

Max:operating pressure 7 bar
Min: operating pressure 1 bar
Double acting

Presión máx. de funcionamiento: 7 bares
Presión min. de funcionamiento: 1 bar
Doble efecto

NOTE

When you need to increase the length of the clamping arm, please don't exceed 1.5 times of the original length.

NOTA

Cuando usted necesite incrementar la longitud del brazo de sujeción, por favor, no exceda de 1.5 veces de la longitud original.

ORDERING INDICATION MÉTODO DE ETIQUETADO DEL PEDIDO

CALC – MS 32 S1

CALC	Series	CALC
MS	Blank MS	Standard type With magnetic induction
32	Cylinder inside diameter	ϕ25,ϕ32,ϕ40,ϕ50 ϕ63,ϕ80,ϕ100
S1	Sensor switch	1Pcs of S1, 2Pcs of S2

MODEL	CLAMPING FORCE AT 7 bar (KN)	CLAMPING STROKE (mm)	TOTAL STROKE (mm)	CYLINDER CAPACITY CLAMP(cm^3)	CYLINDER CAPACITY UNCLAMP(cm^3)	EFF.PISTON AREA CLAMP(cm^2)	EFF.PISTON AREA UNCLAMP(cm^2)	RANGE OF TEMPERATURE(°C)
CALC-25	0.20	17	20	9.82	8.24	4.91	4.12	-10~+60°C
CALC-32	0.31	20	23	18.49	15.89	8.04	6.91	-10~+60°C
CALC-40	0.56	22	25	31.40	26.40	12.56	10.56	-10~+60°C
CALC-50	0.91	27	30	58.89	49.47	19.63	16.49	-10~+60°C
CALC-63	1.69	32	35	109.06	98.00	31.16	28	-10~+60°C
CALC-80	2.79	40	43	216.03	195.22	50.24	45.4	-10~+60°C
CALC-100	4.69	45	48	376.80	50.21	78.5	10.46	-10~+60°C

Unit:mm

MODEL	STANDARD TYPE		WITH MAGNET		C1	C2	ΦD	E	F	G1	G2	G3	H	J	J1	K	L	L1	M	N	α
	A1	B	A1	B																	
CALC-25	65.5	41	75.5	51	□13	6	ϕ5	25	50	45	14	17	3	40	–	28	M5×0.8	10.5	M5*0.8	8	75°
CALC-32	78	49	93	64	□16	8	ϕ6	31	60	53	17	20	3	44	50	34	M5×0.8	11	PT1/8	9	70°
CALC-40	82.5	51.5	97.5	66.5	□16	8	ϕ6	32	65	58	20	22	3	52	58	40	M6×1.0	9.5	PT1/8	10	65°
CALC-50	96.6	58.6	106.6	68.6	□19	10	ϕ8	35	75	66	23	27	3	62	71	48	M6×1.0	11	PT1/4	11	70°
CALC-63	115.5	72.5	125.5	82.5	□22	10	ϕ8	38.5	85	76	29.5	32	3	75	84.5	60	M6×1.0	11	PT1/4	11	65°
CALC-80	138	84	148	94	□22	10	ϕ10	47	105	94	37	40	3	94	104	74	M8	15.5	PT1/4	14	65°
CALC-100	163.5	99	173.5	109	□25	12	ϕ12	53	125	110	45	45	3	114	124	90	M10	15	PT1/4	18	60°

CAS-PNEUMATIC SWING CLAMP CAS-GARRA GIRATORIA DE SISTEMA NEUMÁTICA

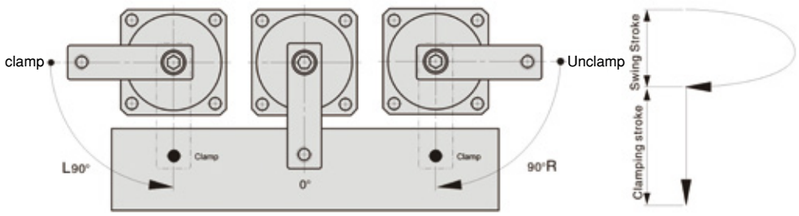

ORDERING INDICATION MÉTODO DE ETIQUETADO DEL PEDIDO

CAS-MF 25 S R×90 -W

CAS	Series	CAS
MF	Type	Blank: Line type MF: Manifold with flow control M: Manifold type FA: Flange type TB: Threaded body
25	Cylinder inside diameter	ϕ25:25mm ϕ32:32mm ϕ40:40mm ϕ50:50mm ϕ63:63mm
S	Clamping arm type	S: Single side arm D: Double side arm
R	Rotating direction	R: Turn right L: Turn left N:0 No swing
90	Rotating angle	90:90° 45:45° 60:60°
W	Welding accessory	

FEATURES

When the piston push down, the clamping arm will rotate to the design angle, then push down on straight line hold the workpiece. You had better install a flow control valve to adjust the acting speed, and don't clamping workpiece when the clamp is running, Otherwise will be easy to damage the body and the spare parts.
The material of cylinder body is aluminum alloy, surface processed with hardening and internal face is smooth,so the service life of product is long.

Max:operating pressure 7 bar
Min: operating pressure 4 bar
Double acting

CARACTERÍSTICAS

Cuando el pistón empuje hacia abajo, el brazo de sujeción rotará con el ángulo de diseño, a continuación, presione hacia abajo en línea recta para sostener la pieza de trabajo.
Se ha de instalar una válvula de control de flujo para ajustar la velocidad de actuación, no sujetar la pieza de trabajo cuando el brazo esté en marcha, de lo contrario será fácil dañar el cuerpo y las piezas de repuesto.
La parte del cilindro es de aleación de aluminio, superficie tratada con endurecimiento, cara interna lisa, por lo que la vida útil del producto es larga.

Presión máx. de funcionamiento: 7 bares
Presión min. de funcionamiento: 4 bares
Doble efecto

NOTE

When you need to increase the length of the clamping arm, please don't exceed 1.5 times of the original length.

NOTA

Cuando usted necesite incrementar la longitud del brazo de sujeción, por favor, no exceda de 1.5 veces de la longitud original.

MODEL	CLAMPING FORCE AT 7 bar (KN)	SWING STROKE(mm)	CLAMPING STROKE(mm)	TOTAL STROKE(mm)	CYLINDER CAPACITY CLAMP(cm^3)	CYLINDER CAPACITY UNCLAMP(cm^3)	EFF.PISTON AREA CLAMP(cm^2)	EFF.PISTON AREA UNCLAMP(cm^2)	RANGE OF TEMPERATURE(°C)
CAS-25	0.24	12	12	24	8.09	11.78	3.37	4.91	-10~+60°C
CAS-32	0.43	12	12	24	14.47	19.30	6.03	8.04	-10~+60°C
CAS-40	0.75	12	12	24	25.32	30.14	10.55	12.56	-10~+60°C
CAS-50	1.18	14	14	28	46.17	54.96	16.49	19.63	-10~+60°C
CAS-63	2.00	15	15	30	84.06	93.48	28.02	31.16	-10~+60°C

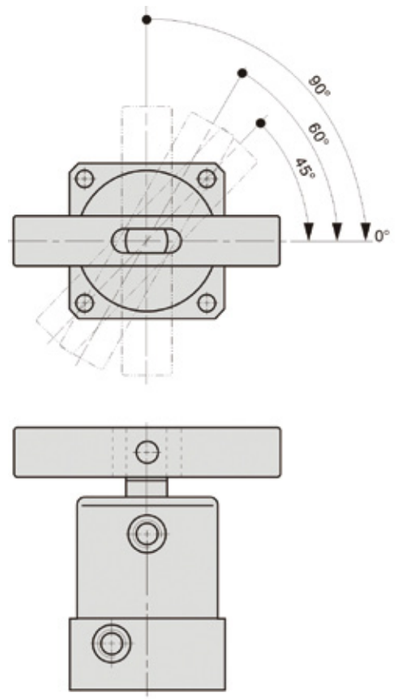

CLAMPING ARM MOUNTING METHODS

CLAMPING ARM REMOVING METHODS

* The following drawing of FA-D & TB-D & M-D ,double side swing clamp,all show unclamping state, swing angle 90°.

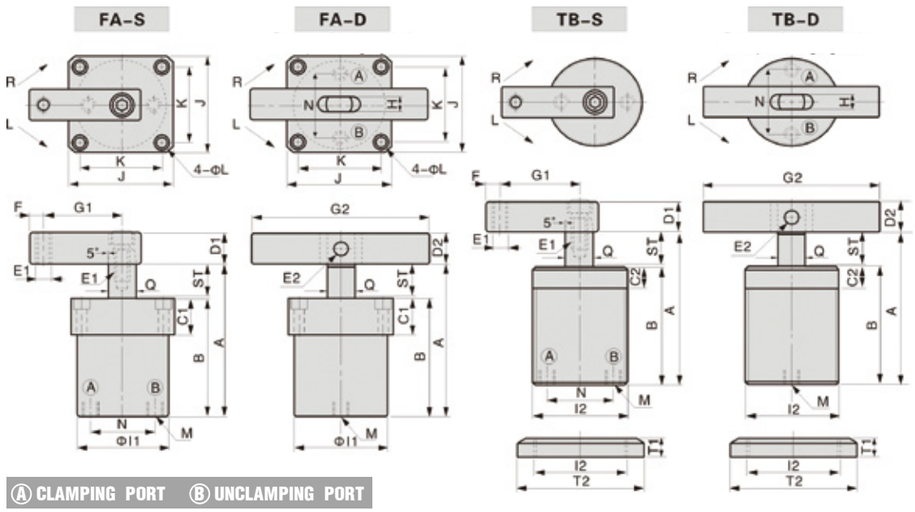

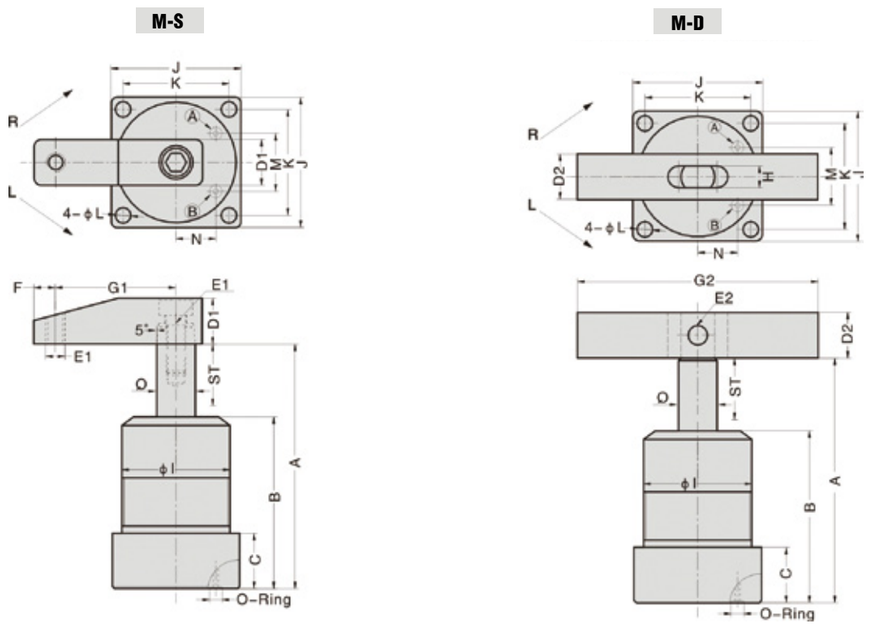

Unit:mm

MODEL	ST: SWING/ CLAMPING	A UNCLAMPING	B	C	C1	C2	D1	D2	E1	E2	F	G1	G2	H	ΦI	ΦI1	I2	J	K	L	M	N	O-Ring	T1×2PCS	T2	Q
CAS-M32	24:12/12	101.5	71	23	-	-	□19	□19	M8	ϕ8	9	50	100	9	ϕ50	-	-	54	44	ϕ6.5	24	16.5	S4	-	-	ϕ16
CAS-M40	24:12/12	107	75	27	-	-	□19	□19	M8	ϕ8	9	50	100	9	ϕ55	-	-	58	48	ϕ6.5	26	20	S3	-	-	ϕ16
CAS-M50	28:14/14	114.5	80	26	-	-	□25	□22	M10	ϕ8	10	70	120	10	ϕ65	-	-	69	55	ϕ8.5	30	25	S3	-	-	ϕ20
CAS-M63	30:15/15	121	86.5	30	-	-	□25	□22	M10	ϕ8	10	70	120	10	ϕ75	-	-	82	64	ϕ8.5	40.5	28	S4	-	-	ϕ20
CAS-FA32	26:11/15	108	78	-	22	-	□19	□19	M8	ϕ8	9	50	100	9	-	ϕ50	-	54	44	ϕ5.6-ϕ9×5.5D.	PT1/8	32	-	-	-	ϕ16
CAS-TB32	26:11/15	108	78	-	-	12	□19	□19	M8	ϕ8	9	50	100	9	-	-	M50×1.5	54	44	-	PT1/8	32	-	11	ϕ70	ϕ16
CAS-FA40	26:11/15	108	78	-	22	-	□19	□19	M8	ϕ8	9	50	100	9	-	ϕ55	-	60	48	ϕ6.8-ϕ10.5×6.5D.	PT1/8	40	-	-	-	ϕ16
CAS-TB40	26:11/15	108	78	-	-	12	□19	□19	M8	ϕ8	9	50	100	9	-	-	M55×1.5	60	48	-	PT1/8	40	-	11	ϕ75	ϕ16
CAS-FA50	30:13/17	124	90	-	25	-	□25	□22	M10	ϕ8	10	70	120	10	-	ϕ65	-	69	55	ϕ6.8-ϕ10.5×6.5D.	PT1/8	50	-	-	-	ϕ20
CAS-TB50	30:13/17	124	90	-	-	15	□25	□22	M10	ϕ8	10	70	120	10	-	-	M65×1.5	69	55	-	PT1/8	50	-	12	ϕ85	ϕ20
CAS-FA63	30:13/17	124	90	-	25	-	□25	□22	M10	ϕ8	10	70	120	10	-	ϕ75	-	82	64	ϕ9-ϕ14×9D.	PT1/8	63	-	-	-	ϕ20

* The following drawing of Line type-D & MF-D,double side swing clamp,all show unclamping state, swing angle 90°.

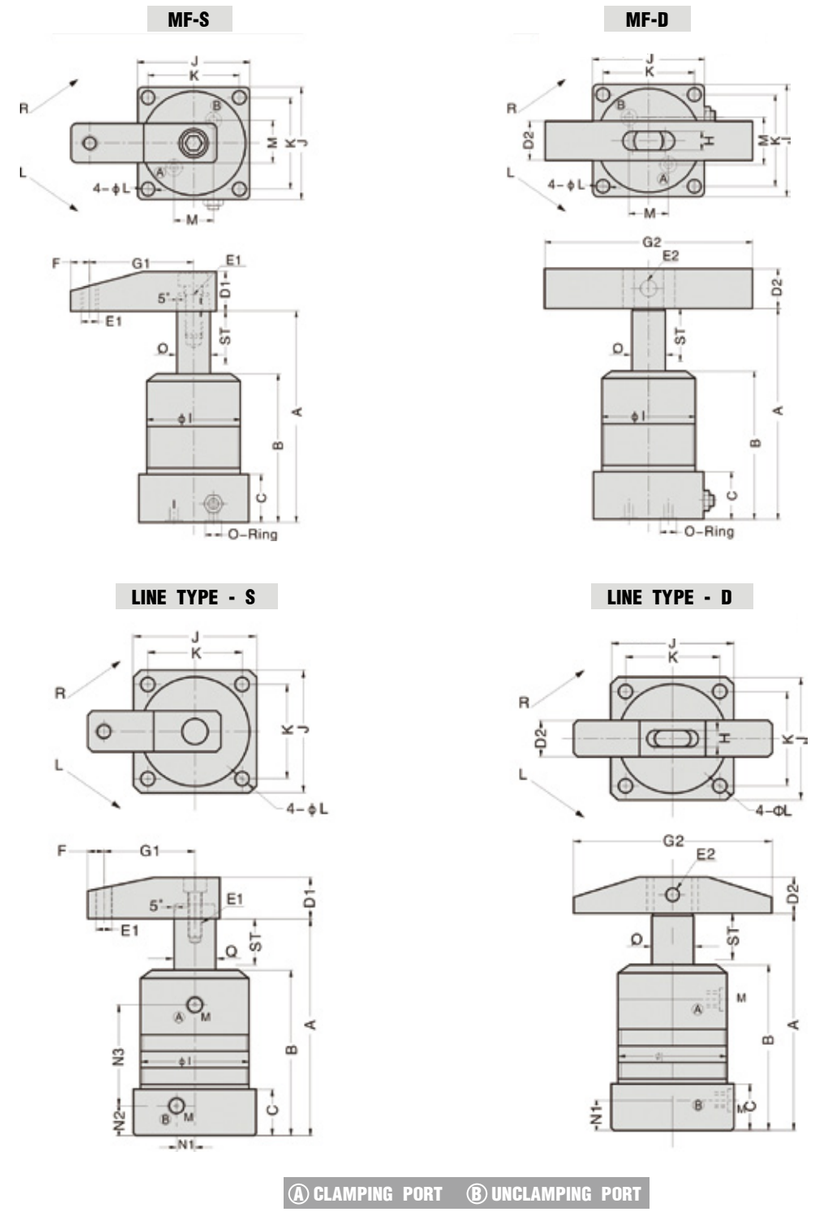

Unit:mm

MODEL	ST: SWING/ CLAMPING	A UNCLAMPING	B	C	D1	D2	E1	E2	F	G1	G2	H	ΦI	J	K	L	M	N1	N2	N3	Q	O-Ring
CAS-25	24:12/12	98	66.5	23	□16	□19	M6	ϕ6	8	30	100	9	ϕ35	40	31	ϕ4.5	M5	7.5	13	38	ϕ14	-
CAS-32	24:12/12	101.5	71	23	□19	□19	M8	ϕ8	9	50	100	9	ϕ50	54	44	ϕ6.5	PT1/8	11.5	14.5	44.5	ϕ16	-
CAS-40	24:12/12	107	75	27	□19	□19	M8	ϕ8	9	50	100	9	ϕ55	58	48	ϕ6.5	PT1/8	11	17	46	ϕ16	-
CAS-50	28:14/14	114.5	80	26	□25	□22	M10	ϕ8	10	70	120	10	ϕ65	69	55	ϕ8.5	PT1/8	17	17.5	50.5	ϕ20	-
CAS-63	30:15/15	121	86.5	30	□25	□22	M10	ϕ8	10	70	120	10	ϕ75	82	64	ϕ8.5	PT1/8	21.8	21	53	ϕ20	-
CAS-MF32	24:12/12	101.5	71	23	□19	□19	M8	ϕ8	9	50	100	9	ϕ50	54	44	ϕ6.5	19	-	-	-	ϕ16	P7
CAS-MF40	24:12/12	107	75	27	□19	□19	M8	ϕ8	9	50	100	9	ϕ55	58	48	ϕ6.5	23	-	-	-	ϕ16	P7
CAS-MF50	28:14/14	114.5	80	26	□25	□22	M10	ϕ8	10	70	120	10	ϕ65	69	55	ϕ8.5	28	-	-	-	ϕ20	P9
CAS-MF63	30:15/15	121	86.5	30	□25	□22	M10	ϕ8	10	70	120	10	ϕ75	82	64	ϕ8.5	32	-	-	-	ϕ20	P9

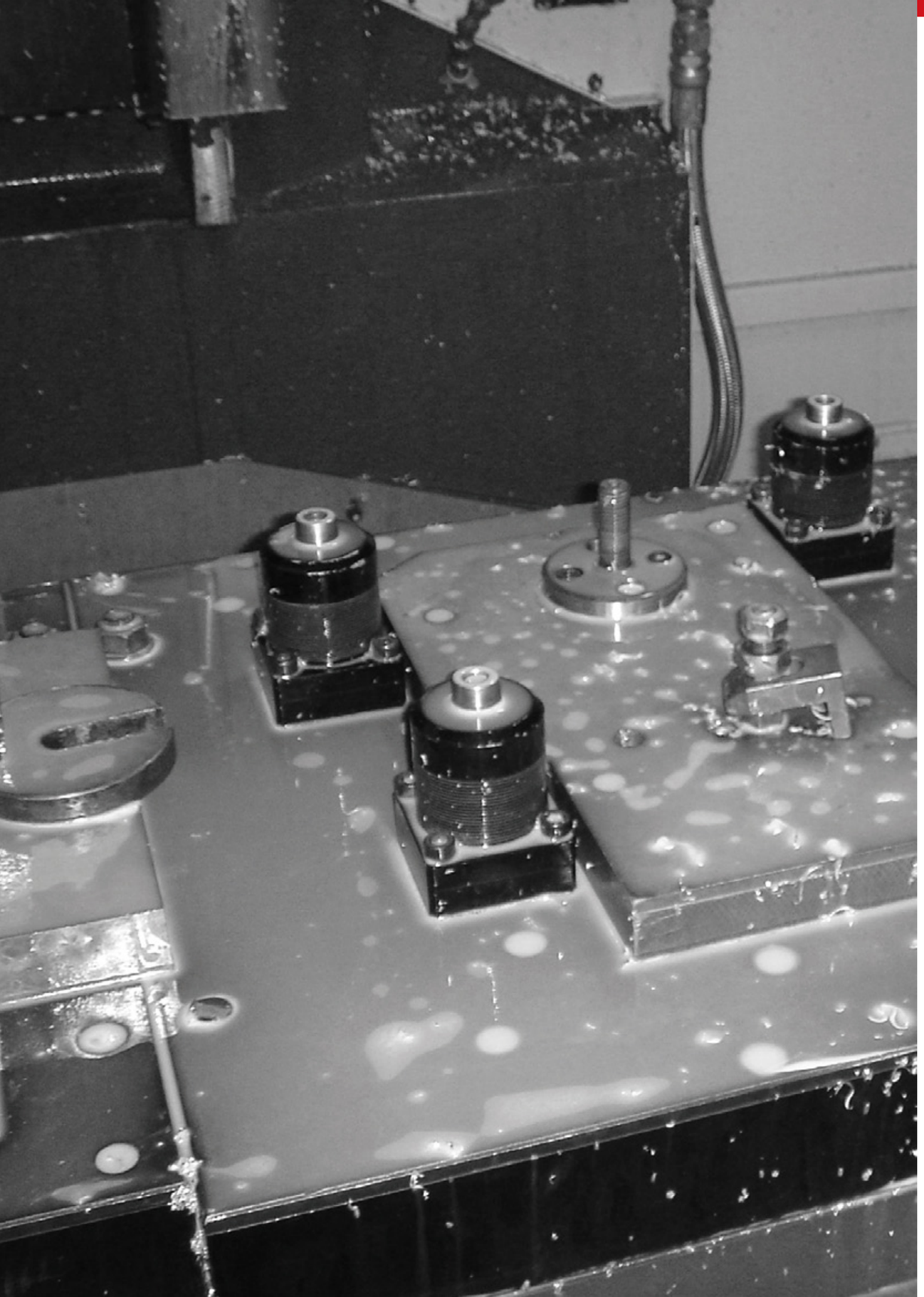

NAU-PNEUMATIC SWING CLAMP NAU-GARRA GIRATORIA DE SISTEMA NEUMÁTICA

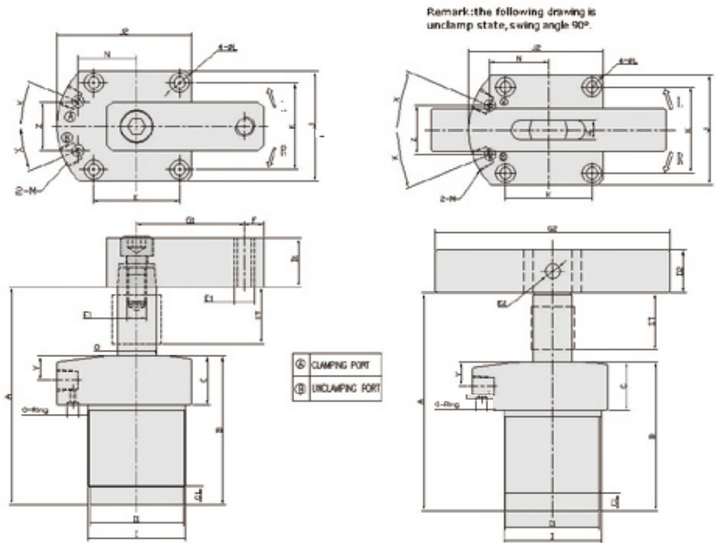

FEATURES

Aluminum alloy body Blackening , Surface heat-treatment for product good wear-resisting .
The type of clamping includes single side swing clamp and double side swing clamp.

CARACTERÍSTICAS

Cuerpo con aleación de aluminio ennegrecimiento, superficie del tratamiento térmico para productos resistentes al desgate. El tipo de sujeción incluye garra giratoria de un solo lado y garra giratoria de doble lado.

Max:operating pressure 7 bar
Min: operating pressure 4 bar
Double acting

Presión máx. de funcionamiento: 7 bares
Presión min. de funcionamiento: 4 bares
Doble efecto

NOTE

When you need to increase the length of the clamping arm, please don't exceed 1.5 times of the original length.

NOTA

Cuando usted necesite incrementar la longitud del brazo de sujeción, por favor, no exceda de 1.5 veces de la longitud original.

ORDERING INDICATION MÉTODO DE ETIQUETADO DEL PEDIDO

NAU – L 40×90

NAU	Series	NAU,NAUD
L	Rotating direction	Turn right R or turn left L
40	Cylinder inside diameter	ϕ32,ϕ40,ϕ50,ϕ63
90	Rotating angle	Standard angle 90° Order angle 0° ,45° ,60°

MODEL	CLAMPING FORCE AT 7 bar (KN)	SWING STROKE(mm)	CLAMPING STROKE(mm)	TOTAL STROKE(mm)	CYLINDER CAPACITY CLAMP(cm^3)	CYLINDER CAPACITY UNCLAMP(cm^3)	EFF.PISTON AREA CLAMP(cm^2)	EFF.PISTON AREA UNCLAMP(cm^2)	RANGE OF TEMPERATURE(°C)
NAU-32	0.34	14	15	29	14.21	23.32	4.9	8.04	-10~+60°C
NAU-40	0.66	14	15	29	27.32	36.42	9.42	12.56	-10~+60°C
NAU-50	1.15	14	15	29	47.82	56.93	16.49	19.63	-10~+60°C
NAU-63	1.84	14	15	29	76.13	90.36	26.25	31.16	-10~+60°C

Unit:mm

MODEL	ST: SWING/ CLAMPING	A UNCLAMP	B	C	C1	D1	D2	E1	E2	F	G1	G2	H	I	I1	J1	J2	K	L	M	N	Z	X	Y	O-RING	Q
NAU-32	29:14/15	111	76	25	9	□25	-	M10		10	55	-	-	M50×1.5	ϕ48	56	69	44	ϕ6.5/ϕ10.5×6.5D	PT1/8	30	24.9	22.5°	12.5	P5	ϕ20
NAUD-32	29:14/15	111	76	25	9	-	□22	-	ϕ8	-	-	120	10	M50×1.5	ϕ48	56	69	44	ϕ6.5/ϕ10.5×6.5D	PT1/8	30	24.9	22.5°	12.5	P5	ϕ20
NAU-40	29:14/15	113.6	80	27	9	□25	-	M10		10	55	-	-	M55×1.5	ϕ53	62	71.5	48	ϕ6.5/ϕ10.5×6.5D	PT1/8	31.4	26	22.5°	14	P5	ϕ20
NAUD-40	29:14/15	113.6	80	27	9	-	□22	-	ϕ8	-	-	120	10	M55×1.5	ϕ53	62	71.5	48	ϕ6.5/ϕ10.5×6.5D	PT1/8	31.4	26	22.5°	14	P5	ϕ20
NAU-50	29:14/15	114.5	80	27	9	□25	-	M10		10	55	-	-	M65×1.5	ϕ63	74	87	57	ϕ8.5/ϕ14×9D	PT1/8	37.6	27.4	20°	14	P7	ϕ20
NAUD-50	29:14/15	114.5	80	27	9	-	□22	-	ϕ8	-	-	120	10	M65×1.5	ϕ63	74	87	57	ϕ8.5/ϕ14×9D	PT1/8	37.6	27.4	20°	14	P7	ϕ20
NAU-63	29:14/15	118	85	32	9	□32	-	M12		11	75	-	-	M80×1.5	ϕ77	88	105.5	70	ϕ11/ϕ16.5×11D	PT1/8	46	38	22.5°	19	P7	ϕ25
NAUD-63	29:14/15	118	85	32	9	-	□25	-	ϕ10	-	-	140	12	M80×1.5	ϕ77	88	105.5	70	ϕ11/ϕ16.5×11D	PT1/8	46	38	22.5°	19	P7	ϕ25

NPSU-PNEUMATIC SWING CLAMP NPSU-GARRA GIRATORIA DE SISTEMA NEUMÁTICA

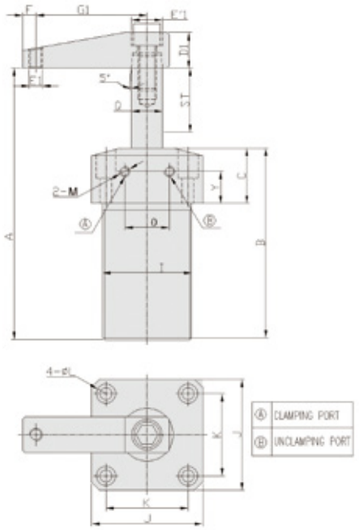

FEATURES

This product is main for clamp in fixture,compressed-air in and out through the hole on flange.
Aluminum alloy body Blackening , Surface heat-treatment for product good wear-resisting .
The top of flange have four screwholes for installation.
Round nuts link the Piston rod and fixture.

CARACTERÍSTICAS

Este producto es principal para la garra de fijación, de aire comprimido de entrada y salida a través del agujero de la brida.
Cuerpo con aleación de aluminio ennegrecimiento, superficie del tratamiento térmico para productos resistentes al desgate.
La parte superior de la brida tiene cuatro orificios de tornillos para instalación.
Tuercas redondas unen la biela del pistón y el accesorio.

Max:operating pressure 7 bar
Min: operating pressure 4 bar
Double acting

Presión máx. de funcionamiento: 7 bares
Presión min. de funcionamiento: 4 bares
Doble efecto

NOTE

When you need to increase the length of the clamping arm, please don't exceed 1.5 times of the original length.

NOTA

Cuando usted necesite incrementar la longitud del brazo de sujeción, por favor, no exceda de 1.5 veces de la longitud original.

ORDERING INDICATION MÉTODO DE ETIQUETADO DEL PEDIDO

NPSU – L 40×90

NPSU	Series	NPSU
L	Rotating direction	Turn right R or turn left L
40	Cylinder inside diameter	ϕ25, ϕ32, ϕ40, ϕ50, ϕ63
90	Rotating angle	Standard angle 90° Order angle 0° ,45° ,60°

MODEL	CLAMPING FORCE AT 7 bar (KN)	CLAMPING STROKE(mm)	SWING STROKE(mm)	TOTAL STROKE(mm)	CYLINDER CAPACITY CLAMP(cm³)	CYLINDER CAPACITY UNCLAMP(cm³)	EFF.PISTON AREA CLAMP(cm²)	EFF.PISTON AREA UNCLAMP(cm²)	RANGE OF TEMPERATURE(°C)
NPSU-25	0.24	13	14	27	9.18	13.26	3.4	4.91	-10~+60°C
NPSU-32	0.42	16	14	30	18.12	24.12	6.04	8.04	-10~+60°C
NPSU-40	0.74	15	15	30	31.68	37.68	10.56	12.56	-10~+60°C
NPSU-50	1.155	17	15	32	52.77	62.82	16.49	19.63	-10~+60°C
NPSU-63	1.96	15	15	30	84.09	93.48	28.03	31.16	-10~+60°C

Unit:mm

MODEL	ST: SWING/ CLAMPING	A UNCLAMP	B	C	D1	E1	G1	F	M	E'1	K	J	I	O	L	Y	Q
NPSU-25	27:13/14	118.5	86.5	25	□16	M6	50	6	M5	M8	37	50	M40×1.5	20	ϕ5.5-ϕ9×5.5D	14.5	ϕ14
NPSU-32	30:16/14	133.5	97.5	25	□19	M8	60	9	PT1/8	M8	45	60	M50×1.5	22	ϕ6.5-ϕ10.5×6.5D	13	ϕ16
NPSU-40	30:15/15	133.5	97.5	25	□19	M8	70	9	PT1/8	M8	50	65	M55×1.5	26	ϕ6.5-ϕ10.5×6.5D	13	ϕ16
NPSU-50	32:17/15	141	104	25	□25	M12	80	10	PT1/8	M10	58	75	M65×1.5	32	ϕ8.5-ϕ14×9D	11	ϕ20
NPSU-63	30:15/15	140	105	25	□25	M12	90	10	PT1/8	M10	70	90	M80×1.5	35	ϕ8.5-ϕ14×9D	11	ϕ20

PB-PNEUMATIC SWING CLAMP INDUCTION TYPE PB-GARRA GIRATORIA DE SISTEMA NEUMÁTICA DE TIPO INDUCCIÓN

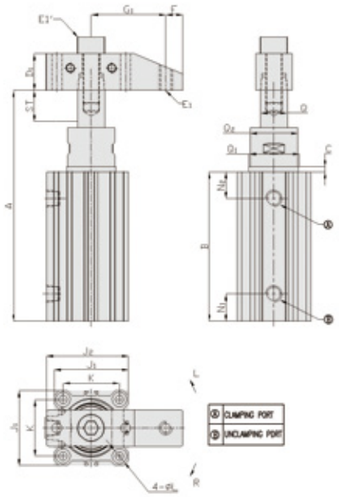

FEATURES

This product is perfect , design in brief,the structure is compact,the weight is light,the service life is long and holding capacity is strong.Two types available--- long stroke and short stroke .
Fixing from top , base or the side of cylinder is ok.
Be applied in industry automatization. clipping of foil, clipping and transporting of work piece on the conveyer belt,main used for packing pipelining.

CARACTERÍSTICAS

Este producto es perfecto, diseño breve, estructura compacta, peso ligero, la vida útil es larga y la capacidad de retención es fuerte.Dos tipos disponibles - carrera larga y carrera corta.
La fijación de la parte superior, la base o el lado del cilindro es aceptable.
Se aplica en la industria de automatización, recorte de papel de aluminio, el recorte y el transporte de la pieza de trabajo en la cinta transportadora,utilizado principalmente para el embalaje de la canalización.

Max:operating pressure 7 bar
Min: operating pressure 4 bar
Double acting

Presión máx. de funcionamiento: 7 bares
Presión min. de funcionamiento: 4 bares
Doble efecto

NOTE

When you need to increase the length of the clamping arm, please don't exceed 1.5 times of the original length.

NOTA

Cuando usted necesite incrementar la longitud del brazo de sujeción, por favor, no exceda de 1.5 veces de la longitud original.

ORDERING INDICATION MÉTODO DE ETIQUETADO DEL PEDIDO

PB-S 40 R×90 - S1

PB	Series	PB
S	Stroke	L: Long stroke S: Short stroke
40	Cylinder inside diameter	ϕ25, ϕ32, ϕ40, ϕ50
R	Rotating direction	Turn right or turn left
90	Rotating angle	Standard angle 90° Order angle 0° ,45° ,60°
S1	Sensor switch	1 Pcs of S1,2 Pcs of S2

MODEL	CLAMPING FORCE AT 7 bar (KN)	CLAMPING STROKE(mm)	SWING STROKE(mm)	TOTAL STROKE(mm)	CYLINDER CAPACITY CLAMP(cm³)	CYLINDER CAPACITY UNCLAMP(cm³)	EFF.PISTON AREA CLAMP(cm²)	EFF.PISTON AREA UNCLAMP(cm²)	RANGE OF TEMPERATURE(°C)
PBS-25	0.23	10	9.5	19.5	6.57	9.57	3.37	4.91	-10~+60°C
PBL-25	0.23	20	9.5	29.5	9.94	14.48	3.37	4.91	-10~+60°C
PBS-32	0.42	10	15	25	15.05	20.10	6.02	8.04	-10~+60°C
PBL-32	0.42	20	15	35	21.07	28.14	6.02	8.04	-10~+60°C
PBS-40	0.74	10	15	25	26.40	31.40	10.56	12.56	-10~+60°C
PBL-40	0.74	20	15	35	36.96	43.96	10.56	12.56	-10~+60°C
PBS-50	1.155	20	19	39	64.35	76.56	16.5	19.63	-10~+60°C
PBL-50	1.155	50	19	69	113.85	135.45	16.5	19.63	-10~+60°C

Unit:mm

MODEL	ST: SWING/ CLAMPING	A UNCLAMP	B	C	D1	E1	E'1	F	G1	J1	J2	K	L	M	N1	N2	Q	Q1	Q2	T
PBS-25	19.5:9.5/10	109	73	3	□16	M6	M8	7	32	40	42	28	ϕ5.5-ϕ9×9D	M5	16.5	14	ϕ12	ϕ26	ϕ25	11
PBL-25	29.5:9.5/20	129	83	3	□16	M6	M8	7	32	40	42	28	ϕ5.5-ϕ9×9D	M5	16.5	14	ϕ12	ϕ26	ϕ25	11
PBS-32	25:15/10	134	80	3	□22	M8	M10	10	45	45	49.5	34	ϕ5.5-ϕ9×9D	PT1/8	16.5	16	ϕ16	ϕ30	ϕ29	14.8
PBL-32	35:15/20	154	90	3	□22	M8	M10	10	45	45	49.5	34	ϕ5.5-ϕ9×9D	PT1/8	16.5	16	ϕ16	ϕ30	ϕ29	14.8
PBS-40	25:15/10	134.5	80	3	□22	M8	M10	10	45	52	57	40	ϕ5.5-ϕ9×9D	PT1/8	19	16	ϕ16	ϕ30	ϕ29	14.8
PBL-40	35:15/20	154.5	90	3	□22	M8	M10	10	45	52	57	40	ϕ5.5-ϕ9×9D	PT1/8	19	16	ϕ16	ϕ30	ϕ29	14.8
PBS-50	39:19/20	186.5	101.5	3.5	□25	M10	M12	10	65	64	71	50	ϕ6.6-ϕ11×13D	PT1/4	24	17	ϕ20	ϕ37	ϕ36	20
PBL-50	69:19/50	246.5	131.5	3.5	□25	M10	M12	10	65	64	71	50	ϕ6.6-ϕ11×13D	PT1/4	24	17	ϕ20	ϕ37	ϕ36	20

PSB-PNEUMATIC BLOCK SWING CLAMP PSB-GARRA GIRATORIA DE SISTEMA NEUMÁTICA EN TIPO BLOQUE

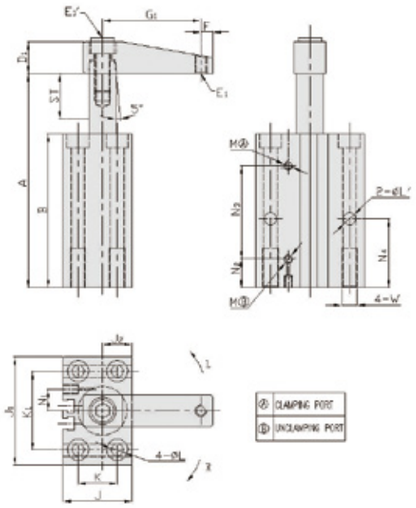

FEATURES

This product is perfect , design in brief,the structure is compact, the weight is light, the service life is long and holding capacity is strong.
You can install an indcutor on this product if you need.
Fixing from top , base or the side of swing clamp is ok.

CARACTERÍSTICAS

Este producto es perfecto, diseño breve, estructura compacta, peso ligero,la vida útil es larga y la capacidad de retención es fuerte.
Puede instalar una indcutor para este producto, si lo necesita.
La fijación de la parte superior, la base o el lado del cilindro es aceptable.

Max:operating pressure 7 bar
Min: operating pressure 4 bar
Double acting

Presión máx. de funcionamiento: 7 bares
Presión min. de funcionamiento: 4 bares
Doble efecto

NOTE

When you need to increase the length of the clamping arm, please don't exceed 1.5 times of the original length.

NOTA

Cuando usted necesite incrementar la longitud del brazo de sujeción, por favor, no exceda de 1.5 veces de la longitud original.

ORDERING INDICATION MÉTODO DE ETIQUETADO DEL PEDIDO

PSB – L 40×90 S1

PSB	Series	PSB
L	Rotating direction	Turn right R or turn left L
40	Cylinder inside diameter	ϕ 25,ϕ32,ϕ40,ϕ50,ϕ63
90	Rotating angle	Standard angle 90
S1	Sensor switch	1Pcs of S1 2Pcs of S2

MODEL	CLAMPING FORCE AT 7 bar (KN)	CLAMPING STROKE(mm)	SWING STROKE(mm)	TOTAL STROKE(mm)	CYLINDER CAPACITY CLAMP(cm^3)	CYLINDER CAPACITY UNCLAMP(cm^3)	EFF.PISTON AREA CLAMP(cm^2)	EFF.PISTON AREA UNCLAMP(cm^2)	RANGE OF TEMPERATURE(°C)
PSB-25	0.23	14	13	27	9.10	13.26	3.37	4.91	-10~+60°C
PSB-32	0.42	14	16	30	18.06	24.12	6.02	8.04	-10~+60°C
PSB-40	0.74	15	15	30	31.68	37.68	10.56	12.56	-10~+60°C
PSB-50	1.155	15	17	32	52.80	62.82	16.5	19.63	-10~+60°C
PSB-63	1.96	15	15	30	84.06	93.48	28.02	31.16	-10~+60°C

Unit:mm

MODEL	ST: SWING/ CLAMPING	A	B	D1	E1	E1'	F	G1	J	J1	J2	K	K1	N1	N2	N3	N4	L	L'	M	W	Q
PSB-25	27:13/14	109	78	□16	M6	M8	6	50	35	55	15	20	40	11	14.5	47.5	35	ϕ6.8- ϕ11*7D	ϕ6.8	M5	M8*20D	ϕ14
PSB-32	30:16/14	126	90	□19	M8	M8	9	60	45	60	20	30	45	12	21	51.5	45	ϕ6.8- ϕ11*7D	ϕ6.8	PT1/8	M8*25D	ϕ16
PSB-40	30:15/15	126	90	□19	M8	M8	9	70	55	70	25	37	52	15	22	49	40	ϕ8.5- ϕ14*9D	ϕ8.5	PT1/8	M10*20D	ϕ16
PSB-50	32:17/15	137	100	□25	M12	M10	10	80	65	85	30	46	66	17.5	25	53.5	40	ϕ8.5- ϕ14*9D	ϕ8.5	PT1/8	M10*30D	ϕ20
PSB-63	30:15/15	137	100	□25	M12	M10	10	90	80	100	37.5	60	80	18	20.5	56.5	35	ϕ10.5-ϕ16.5*10.5D	ϕ10.5	PT1/8	M12*25D	ϕ20

CSW-PNEUMATIC SUPPORT CLAMP CSW-ELEMENTO DE SOPORTE NEUMÁTICO

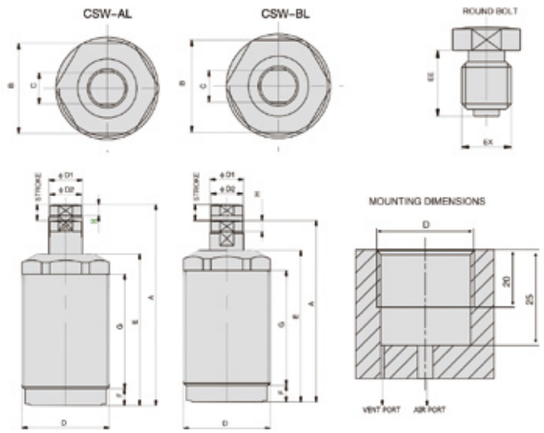

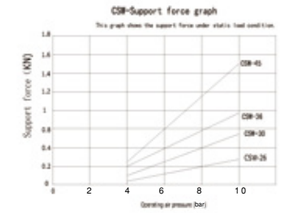

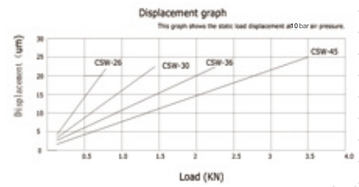

FEATURES

Compact structure, reasonable design, long service life. In 4-10 bar working conditions stable performance.
According to the different thickness of work piece, replaceable piston rod out of the spring strength.
The piston rod piece out of contact force is small,0.2-0.6 bar range, especially suitable for thin work piece.

CARACTERÍSTICAS

Estructura compacta, diseño razonable, larga vida útil. Rendimiento de trabajo en condiciones de trabajo de 4-10bares.
De acuerdo al diferente grosor de la pieza de trabajo, el pistón sustituible de la fuerza del resorte.
El pistón de la fuerza de contacto es pequeña, el rango es de 0.2-0.6 bares, adecuado especialmente para piezas de trabajo fino.

Max:operating pressure 10 bar
Min: operating pressure 4 bar
Single acting

Presión máx. de funcionamiento:10 bares
Presión min. de funcionamiento: 4 bares
Simple efecto

MODEL	CLAMPING FORCE AT 10 bar (KN)	CLAMPING FORCE AT 4 bar (KN)	STROKE (mm)	CYLINDER CAPACITY(cm^3)	PISTON AREA(cm^2)	RANGE OF TEMPERATURE(°C)
CSW-26AL	0.60	0.05	6.5	1.20	0.64	-10~+60°C
CSW-26BL	0.60	0.05	6.5	1.20	0.64	-10~+60°C
CSW-30AL	0.80	0.1	6.5	1.80	0.64	-10~+60°C
CSW-30BL	0.80	0.1	6.5	1.80	0.64	-10~+60°C
CSW-36AL	0.90	0.2	8	2.70	0.79	-10~+60°C
CSW-36BL	0.90	0.2	8	2.70	0.79	-10~+60°C
CSW-45AL	1.50	0.35	8	4.80	1.13	-10~+60°C
CSW-45BL	1.50	0.35	8	4.80	1.13	-10~+60°C

NOTE

Columns fortress can not exert eccentric load.
Can not exert overloaded.
Can not turn the piston rod when it's locking state.

NOTA

Las columnas no puede ejercer carga excéntrica.
No se puede ejercer sobrecarga.
No se puede girar el pistón cuando está en estado bloqueado.

Type A: Supporting with a spring , the spring is used to control a clamping force when the knocking-out rod (piston rod) extends to a highest knocking-out position and clamps the work piece .

Type B: Supporting with air pressure, it is operated by means of oil pressure and is knocked out when being filled with oil and clamp the work piece.

Tipo A: Soporte con resorte, el resorte se utiliza para controlar una fuerza de sujeción cuando la biela del pistón se extiende a una posición más alta sujetando la pieza de trabajo.

Tipo B: Soporte con la presión neumático, de se opera por medio de la presión del aire y es manteniendo la posición de sujeto, cuando se llena con aceite sujetando la pieza de trabajo.

Unit:mm

MODEL	A	B	C	D	E	F	G	H	D1	D2	EE	EX
CSW-26AL	68.5	22	9	M26*1.5	54	4.6	41	3	ϕ10	ϕ9.8	10	M8
CSW-26BL	62	22	9	M26*1.5	54	4.6	41	3	ϕ10	ϕ9.8	10	M8
CSW-30AL	75.5	24	9	M30*1.5	60	5	46	4.2	ϕ10	ϕ9.8	10	M8
CSW-30BL	69	24	9	M30*1.5	60	5	46	4.2	ϕ10	ϕ9.8	10	M8
CSW-36AL	81	30	9	M36*1.5	62.5	5	46	4.2	ϕ10	ϕ9.8	10	M8
CSW-36BL	73	30	9	M36*1.5	62.5	5	46	4.2	ϕ10	ϕ9.8	10	M8
CSW-45AL	95	36	10	M45*1.5	76	6	59	4.2	ϕ12	ϕ11.5	19.5	M8
CSW-45BL	87	36	10	M45*1.5	76	6	59	4.2	ϕ12	ϕ11.5	19.5	M8

HYDRAULIC CLAMPING SYSTEM

SISTEMA DE SUJECIÓN HIDRÁULICO

CLF5H-HYDRAULIC LEVERAGE CLAMP CLF5H-GRAPA HIDRÁULICO DEL TIPO PALANCA

LINE TYPE

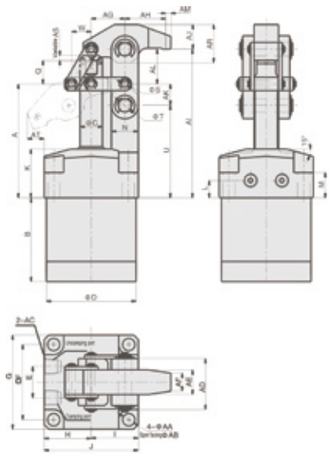

MANIFOLD TYPE

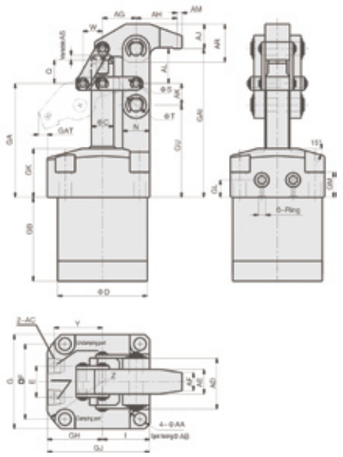

FEATURES

Operate conveniently,this series products design with connecting rod structure,at the time of termination holding state,clamping arm can be put lower than holding position, and reduce the interference with loading and unloading operation.
Clamping arm of the products is very flexible. It can holding more capacity than swing clamp and leverage clamp,and can reduce the interference of the surrounding equipment,so it can save working space.
Product with special dustproof design and high sealing,can prevent the cutting chips and coolant to infiltration. So it can be used in more severe conditions.

CARACTERÍSTICAS

Operar convenientemente, esta serie de productos diseñados con estructura de varilla de conexión, al momento de la terminación del estado holding, el brazo de sujeción se puede poner bajo posición holding, y reducir la interferencia con la operación de carga y descarga.
El brazo de sujeción de los productos es muy flexible.
Puede que tenga mas capacidad de soporte que la garra giratoria y grapa de palanca, y puede reducir la interferencia del equipo que lo rodea, por lo que puede ahorrar espacio de trabajo.
Producto con un diseño especial a prueba de polvo y alto sellado, puede prevenir las virutas de corte y refrigerante a la infiltración.

Max:operating pressure 70 bar
Min: operating pressure 5 bar

Presión máx. de funcionamiento: 70 bares
Presión min. de funcionamiento: 5 bares

NOTE

The practical clamping force is 60%-70% of theoretical clamping force.High temperature oil seals are available on request.

NOTA

La fuerza de sujeción práctica es 60% -70% de la fuerza de sujeción teórica.Los sellos de aceite de alta temperatura están disponibles bajo pedido.

ORDERING INDICATION MÉTODO DE ETIQUETADO DEL PEDIDO

CLF5H – 32 G

CLF5H	Series	CLF5H
32	Hydraulic cylinder inside diameter	ϕ25,ϕ32,ϕ40,ϕ 50
G	Port type	Blank: line type G: Manifold type

Unit:mm

MODEL	CLAMPING FORCE AT 70 bar (KN)	CLAMPING STROKE(mm)	TOTAL STROKE(mm)	OIL CAPACITY CLAMP(cm³)	OIL CAPACITY UNCLAMP(cm³)	EFF.PISTON AREA CLAMP(cm²)	EFF.PISTON AREA UNCLAMP(cm²)	RANGE OF TEMPERATURE(°C)
CLF5H-25	2.90	31.5	34	16.694	11.458	4.91	3.37	-10~+70°C
CLF5H-32	4.41	35.5	38	30.552	25.08	8.04	6.60	-10~+70°C
CLF5H-40	7.09	41	44	55.264	46.464	12.56	10.56	-10~+70°C
CLF5H-50	11.36	47	50	98.15	82.45	19.63	16.49	-10~+70°C

MODEL	A	B	C	D	E	F	G	H	I	J	K	L	M	N	Q	S	T	U	W	AA	AB	AC	AD	AE	AF	AG	AH	AI	AJ	AK	AL	AM	AR	AT
CLF5H-25	70	59.5	14	47	21	40	50	25	25	50	30.5	11.5	13.5	12	12	4	6	56.5	13	5.5	9.5	PT1/8	22	12	8	19	23	88	13	13.5	18	4	20	12
CLF5H-32	75	70.5	14	55	21	47	59	29.5	29.5	59	30.5	11.5	15.5	16	14	5	8	60	13	6.6	11	PT1/8	28	16	12	21.5	28	95	15	15	20	4	23	11
CLF5H-40	89.5	79.5	16	65	25	55	69	34.5	34.5	69	37.5	13.5	20.5	20	20	6	10	72	16	9	14	PT1/4	36	19	14	24.5	31	117.5	18	17.5	28	4	28	18
CLF5H-50	101.5	86.5	20	80	28	67	84	42	42	84	43.5	15.5	22.5	24	21	6	12	83	17.5	11	18	PT1/4	42	22	16	30	37	132.5	22	19	31	4	34	15

MODEL	GA	GB	C	D	E	F	G	GH	I	GJ	GK	GL	GM	N	Q	S	T	GU	W	O-RING	Y	Z	AA	AB	AC	AD	AE	AF	AG	AH	GAI	AJ	AK	AL	AM	AR	GAT
CLF5H-25G	70.5	59	14	47	21	40	50	35	25	60	31	12	18	12	12	4	6	57	13	S4	29	39	5.5	9.5	PT1/8	22	12	8	19	23	88.5	13	13.5	18	4	20	2
CLF5H-32G	75.5	70	14	55	21	47	59	37.5	29.5	67	31	12	17	16	14	5	8	60.5	13	S4	32	43	6.6	11	PT1/8	28	16	12	21.5	28	95.5	15	15	20	4	23	3
CLF5H-40G	90	79	16	65	25	55	69	45.5	34.5	80	38	14	21	20	20	6	10	72.5	16	S4	37	51	9	14	PT1/4	36	19	14	24.5	31	118	18	17.5	28	4	28	7
CLF5H-50G	102	86	20	80	28	67	84	51	42	93	44	16	23	24	21	6	12	83	17.5	S5	44	57	11	18	PT1/4	42	22	16	30	37	133	22	19	31	4	34	6

CLKA-HYDRAULIC LEVERAGE CLAMP CLKA-GRAPA HIDRÁULICO DEL TIPO PALANCA

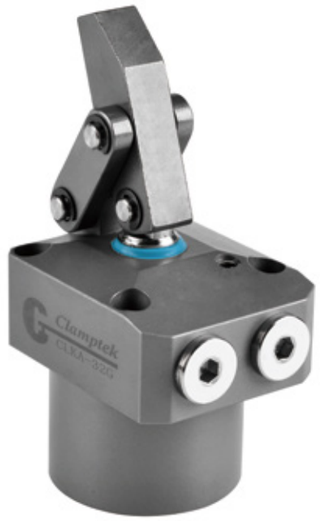

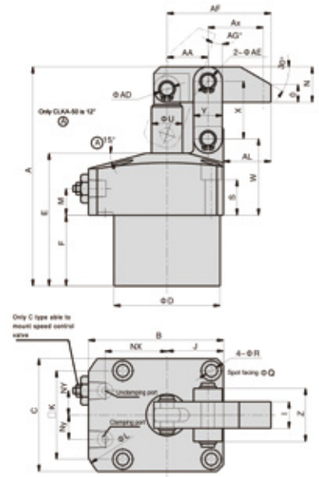

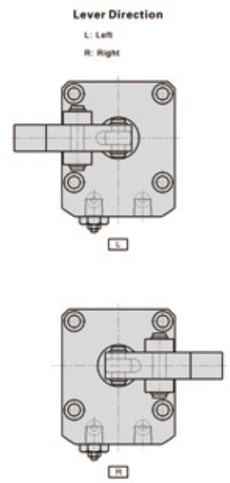

FEATURES

Product with optimal design,so the clamping capacity is better than others clamps.
Product with the integrated structure on support site and cylinder body,so made product will be more impact,and strength will be improved.
Product with special dustproof design,to make sure a high sealing performance.
Product with lower flange design,more suitable for compact and light fixture.

CARACTERÍSTICAS

Producto con diseño óptimo, por lo que la capacidad de sujeción es mejor que otras grapas.
Producto con estructura integrada en el sitio de soporte y la parte del cilindro, producto de impacto y fuerza mejorada.
Producto con diseño especial a prueba de polvo, para asegurarse un alto rendimiento de sellado.
Producto con diseño de brida inferior, adecuado para el accesorio compacto y ligero.

Max:operating pressure 70 bar
Min: operating pressure 5 bar

Presión máx. de funcionamiento: 70 bares
Presión min. de funcionamiento: 5 bares

NOTE

The practical clamping force is 60%-70% of theoretical clamping force.High temperature oil seals are available on request.

NOTA

La fuerza de sujeción práctica es 60% -70% de la fuerza de sujeción teórica.Los sellos de aceite de alta temperatura están disponibles bajo pedido.

ORDERING INDICATION MÉTODO DE ETIQUETADO DEL PEDIDO

CLKA – 32 C L

CLKA	Series	CLKA
32	Hydraulic cylinder inside diameter	ϕ22,ϕ25,ϕ32,ϕ 40 ϕ 50,ϕ 63,ϕ70,ϕ80
C	Port type	Blank: line type G: Manifold type C: manifold with flow type
L	Lever direction	Blank: standard L:Left R:Right

MODEL	CLAMPING FORCE AT 70 bar (KN)	SWING STROKE(mm)	CLAMPING STROKE(mm)	TOTAL STROKE(mm)	OIL CAPACITY CLAMP(cm³)	OIL CAPACITY UNCLAMP(cm³)	EFF.PISTON AREA CLAMP(cm²)	EFF.PISTON AREA UNCLAMP(cm²)	RANGE OF TEMPERATURE(°C)
CLKA-22	2.07	16	16	18.5	7.03	5.57	3.8	3.01	-10~+70°C
CLKA-25	2.74	17.5	17.5	20.5	10.07	7.75	4.91	3.78	-10~+70°C
CLKA-32	4.52	20.5	20.5	23.5	18.89	15.28	8.04	6.5	-10~+70°C
CLKA-40	6.49	23	23	26	32.66	27.43	12.56	10.55	-10~+70°C
CLKA-50	10.73	26.5	26.5	29.5	57.91	48.65	19.63	16.49	-10~+70°C
CLKA-63	17.79	32	32	35	109.06	95.76	31.16	27.36	-10~+70°C
CLKA-70	21.35	38	38	41	141.37	132.55	34.48	32.33	-10~+70°C
CLKA-80	30.94	46	46	49	246.18	199.04	50.24	40.62	-10~+70°C

Unit:mm

MODEL	A	B	C	D	E	F	I	J	K	L	M	N	O	Nx	Ny	Q	R	S	U	W	X	Y	Z	AA	AD	AE	AF	AG	AL	AX	PORT WITH LINE TYPE	O-RING HOLE (C/G TYPE)
CLKA-22	78.5	49	40	36	48	23	10	20	31.4	66	11	12.5	6	23.5	8	7.5	4.5	15.5	10	30	20	11	19	14.5	5	5	37	19.6	17	19	2-PT1/8	P5
CLKA-25	87.5	54	45	40	54	29	12	22.5	34	72	11	14	8	26	9	9	5.5	15	12	30.5	22	13	21	16	6	6	40	20.2	17.5	20.5	2-PT1/8	P5
CLKA-32	99	61	51	48	60	32	12	25.5	40	81	12	16	8	30	11	9	5.5	16	14	34.5	26	13	24	18.5	6	6	47	18.9	21.5	23.5	2-PT1/8	P5
CLKA-40	110.5	69	60	55	65	37	16	30	47	88	12	20	12	33.5	12	11	6.8	13.5	16	35.5	30	16	28	21	6	8	55	19.3	25	29	2-PT1/8	P5
CLKA-50	127.5	81	70	65	73.5	43.5	19	35	55	106	13	25	17	39.5	15	11	6.8	16	20	39	35.5	19	37	24.5	8	10	61.5	20	26.5	32	2-PT1/4	P7
CLKA-63	151	94.5	85	75	84	47	22	42.5	63	116	16	32	24	45	16	14	9	17.5	22	48	43.5	25	40	30	10	12	72.5	21.4	30	37.5	2-PT1/4	P7
CLKA-70	180	109.5	100	90	101	61	25	50	75	136	16	38	30	52.5	18.5	17.5	11	17	28	52.5	52.5	28	49	36	12	15	82.5	22.4	32.5	41.5	2-PT3/8	P7
CLKA-80	209	127	120	105	115	65	32	60	88	152	19	45	37	60	22.5	20	14	23	35.5	64	64	32	64	44	15	18	100	23.1	40	51	2-PT3/8	P7

CHLC-HYDRAULIC LEVERAGE CLAMP CHLC-GRAPA HIDRÁULICO DEL TIPO PALANCA

CHLC-LINE TYPE

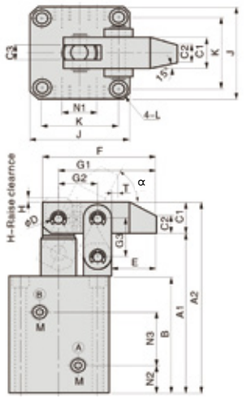

CHLC-M

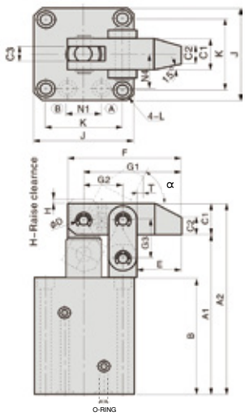

Ⓐ CLAMPING PORT Ⓑ UNCLAMPING PORT

FEATURES

The clamp structure of this model is based on the lever principle: it will be tightened as piston pushing out. The clamping force is stronger than the swing clamp.
The parts are installed outside the cylinder barrel for maintaining easily.
The cylinder barrel and clamp structure are made of carbon steel. It is firm , durable and long-lived to use.
The material of the piston is 45 steel, heat treatment, chrome plated.

CARACTERÍSTICAS

La estructura de la garra de este modelo se basa en el principio de palanca: se aprieta como pistón de empuje hacia afuera.
La fuerza de sujeción es más fuerte que la garra giratoria. Las partes están instaladas fuera del cuerpo cilíndrico para mantenimiento fácil.
La parte del cilindro y la estructura de la garra están hechas de acero al carbono. Es firme, duradero y de larga vida útil.
El material del pistón es de 45 de acero, tratamiento térmico, cromado.

Max:operating pressure 50 bar
Min: operating pressure 10 bar
Double acting

Presión máx. de funcionamiento: 50 bares
Presión min. de funcionamiento: 10 bares
Doble efecto

NOTE

When you need to increase the length of the clamping arm, please don't exceed 1.5 times of the original length.

NOTA

Cuando usted necesite incrementar la longitud del brazo de sujeción, por favor, no exceda de 1.5 veces de la longitud original.

ORDERING INDICATION MÉTODO DE ETIQUETADO DEL PEDIDO

CHLC – MF 25 A

CHLC	Series	CHLC
MF	Type	Blank: Line type M: Manifold type MF: Manifold with flow control FA: Flange type FAM: Flange with manifold FAMT: Flange with flow control
25	Hydraulic cylinder inside diameter	ϕ25,ϕ32,ϕ40,ϕ50 ϕ63
A	A integrated	

MODEL	CLAMPING FORCE AT 50 bar (KN)	CLAMPING STROKE(mm)	TOTAL STROKE(mm)	OIL CAPACITY CLAMP(cm³)	OIL CAPACITY UNCLAMP(cm³)	EFF.PISTON AREA CLAMP(cm²)	EFF.PISTON AREA UNCLAMP(cm²)	RANGE OF TEMPERATURE(℃)
CHLC-25	1.67	22	25	12.28	5.93	4.91	2.37	-10~+70°C
CHLC-32	2.73	22	25	20.10	12.25	8.04	4.9	-10~+70°C
CHLC-40	4.16	26	30	37.68	25.86	12.56	8.62	-10~+70°C
CHLC-50	6.49	30	34	66.74	45.80	19.63	13.47	-10~+70°C
CHLC-63	9.86	36	40	124.64	85.04	31.16	21.26	-10~+70°C

Unit:mm

MODEL	A1	A2	B	C1	C2	C3	ΦD	E	F	G1	G2	G3	H	J	K	L	M	N1	N2	N3	N4	O-Ring	α	T
CHLC-25	103	122	76	□19	11	9	ϕ8	25	64	55	22	24	3	55	42	ϕ6.8-ϕ10.5*6.5D	PT1/8	-	17	33	-	-	61°	4
CHLC-M25	103	122	76	□19	11	9	ϕ8	25	64	55	22	24	3	55	42	ϕ6.8-ϕ10.5*6.5D	-	18	-	-	20	P7	61°	4
CHLC-32	112	131	85	□19	11	9	ϕ8	25	64	55	22	24	3	57	44	ϕ6.8-ϕ10.5*6.5D	PT1/8	-	19	38	-	-	61°	5
CHLC-M32	112	131	85	□19	11	9	ϕ8	25	64	55	22	24	3	57	44	ϕ6.8-ϕ10.5*6.5D	-	22	-	-	22	P7	61°	5
CHLC-40	122	144	90	□22	13	10	ϕ10	30	77	66	26	29	4	69	52	ϕ9- ϕ14*9D	PT1/4	-	19	40	-	-	61°	5.5
CHLC-M40	122	144	90	□22	13	10	ϕ10	30	77	66	26	29	4	69	52	ϕ9- ϕ14*9D	-	26	-	-	26	P8	61°	5.5
CHLC-50	137	162	100	□25	15	11	ϕ12	35.5	90	77	30	33	4	75	58	ϕ9- ϕ14*9D	PT1/4	-	21.5	45	-	-	61°	7.5
CHLC-M50	137	162	100	□25	15	11	ϕ12	35.5	90	77	30	33	4	75	58	ϕ 9- ϕ14*9D	-	32	-	-	29	P8	61°	7.5
CHLC-63	155	187	111	□32	19	15	ϕ15	43	110	94	36	39	4	96	75	ϕ11-ϕ18*11D	PT1/4	-	22	52	-	-	66°	2
CHLC-M63	155	187	111	□32	19	15	ϕ15	43	110	94	36	39	4	96	75	ϕ11-ϕ18*11D	-	38	-	-	38	P9	66°	2

CHLC-MF

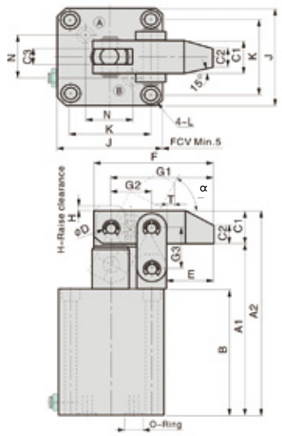

CHLC-FA

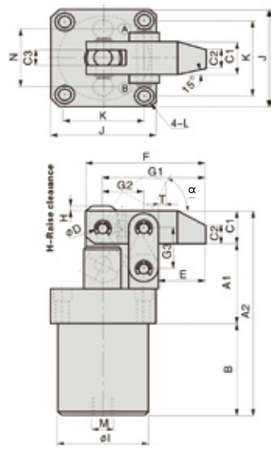

CHLC-MF

Ⓐ CLAMPING PORT Ⓑ UNCLAMPING PORT

CHLC-FAM

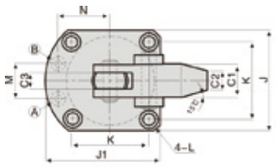

CHLC-FAMT

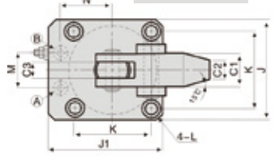

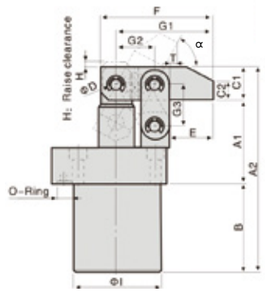

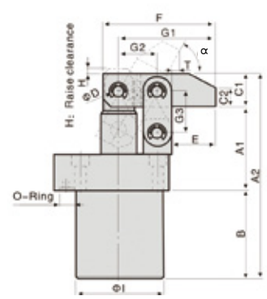

Ⓐ CLAMPING PORT Ⓑ UNCLAMPING PORT

Unit:mm

MODEL	A1	A2	B	C1	C2	C3	ΦD	E	F	G1	G2	G3	H	ΦI	J	J1	K	L	M	N	O-Ring	α	T
CHLC-MF25	112	131	85	□19	11	9	ϕ8	25	64	55	22	24	3	-	55	-	42	ϕ6.8 -ϕ10.5*6.5D	-	19	P7	61°	4
CHLC-MF32	115	134	88	□19	11	9	ϕ8	25	64	55	22	24	3	-	57	-	44	ϕ6.8 -ϕ10.5*6.5D	-	21	P7	52°	11
CHLC-MF40	130	152	98	□22	13	10	ϕ10	30	77	66	26	29	4	-	69	-	52	ϕ9 -ϕ14*9D	-	23	P9	58°	7.5
CHLC-MF50	145	170	108	□25	15	11	ϕ12	35.5	90	77	30	33	4	-	75	-	58	ϕ9 -ϕ14*9D	-	28	P9	61°	7.5
CHLC-FA25	49	131	63	□19	11	9	ϕ8	25	64	55	22	24	3	ϕ45	55	-	42	ϕ6.8 -ϕ10.5*6.5D	PT1/4	25	-	61°	4
CHLC-FA32	52	134	63	□19	11	9	ϕ8	25	64	55	22	24	3	ϕ50	57	-	44	ϕ6.8 -ϕ10.5*6.5D	PT1/4	32	-	61°	5
CHLC-FA40	57	152	73	□22	13	10	ϕ10	30	77	66	26	29	4	ϕ58	69	-	52	ϕ9 -ϕ14*9D	PT1/4	40	-	61°	5.5
CHLC-FA50	67	170	78	□25	15	11	ϕ12	35.5	90	77	30	33	4	ϕ68	75	-	58	ϕ9 -ϕ14*9D	PT1/4	50	-	61°	7.5
CHLC-FAM25	49	122	54	□19	11	9	ϕ8	25	64	55	22	24	3	ϕ45	55	64	42	ϕ6.8 -ϕ10.5*6.5D	20	28	P6	61°	4
CHLC-FAM32	52	131	60	□19	11	9	ϕ8	25	64	55	22	24	3	ϕ50	57	65.5	44	ϕ6.8 -ϕ10.5*6.5D	22	29	P6	61°	5
CHLC-FAM40	57	144	65	□22	13	10	ϕ10	30	77	66	26	29	4	ϕ58	69	79	52	ϕ9 -ϕ13.5*9D	25	34.5	P9	61°	5.5
CHLC-FAM50	67	162	70	□25	15	11	ϕ12	35.5	90	77	30	33	4	ϕ68	75	87	58	ϕ9 -ϕ13.5*9D	30	39	P9	61°	7.5
CHLC-FAMT25	49	122	54	□19	11	9	ϕ8	25	64	55	22	24	3	ϕ45	55	64	42	ϕ6.8 -ϕ10.5*6.5D	20	28	P6	61°	4
CHLC-FAMT32	52	131	60	□19	11	9	ϕ8	25	64	55	22	24	3	ϕ50	57	65.5	44	ϕ6.8 -ϕ10.5*6.5D	22	29	P6	61°	5
CHLC-FAMT40	57	144	65	□22	13	10	ϕ10	30	77	66	26	29	4	ϕ58	69	79	52	ϕ9 -ϕ13.5*9D	25	34.5	P9	61°	5.5
CHLC-FAMT50	67	162	70	□25	15	11	ϕ12	35.5	90	77	30	33	4	ϕ68	75	87	58	ϕ9 -ϕ13.5*9D	30	39	P9	61°	7.5

LHC01-HYDRAULIC LEVERAGE CLAMP LHC01-GRAPA HIDRÁULICO DEL TIPO PALANCA

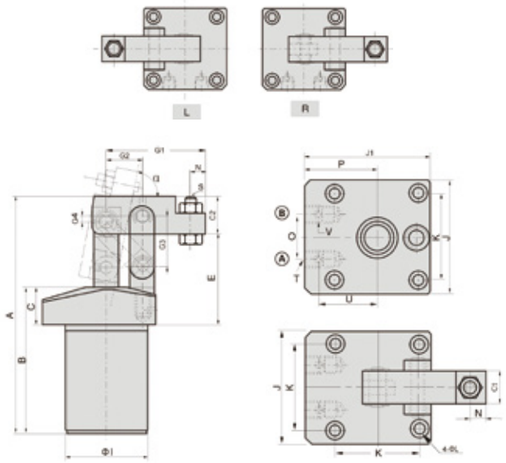

Ⓐ CLAMPING PORT Ⓑ UNCLAMPING PORT

FEATURES

Use high-quality seal to avoid leakage and keep long operation.
Lever principle design is applied on this hydraulic clamp. Clamping work piece easily and improve efficiency.
The material of the cylinder body and the piston is 45 steel, heat treatment,chrome plated.

CARACTERÍSTICAS

Use sello de alta calidad para evitar fugas y mantener un largo funcionamiento.
Se aplica un diseño de palanca sobre la garra hidráulica. Facilidad al sujetar la pieza de trabajo y eficiencia mejorada.
El material del cuerpo del cilindro y el pistón es 45 acero, tratamiento térmico, cromado.

Max:operating pressure 50 bar
Min: operating pressure 20 bar
Double acting

Presión máx. de funcionamiento: 50 bares
Presión min. de funcionamiento: 20 bares
Doble efecto

NOTE

Please don't exceed 1.5 times of the original length, if you need to increase the length of the clamping arm The practical clamping force is 60%-70% of theoretical clamping force.High temperature oil seals are available on request.

NOTA

Cuando usted necesite incrementar la longitud del brazo de sujeción, por favor, no exceda de 1.5 veces de la longitud original.La fuerza de sujeción práctica es 60% -70% de la fuerza de sujeción teórica.Los sellos de aceite de alta temperatura están disponibles bajo pedido.

ORDERING INDICATION MÉTODO DE ETIQUETADO DEL PEDIDO

LHC01 – D 40 R A

LHC01	Series	LHC01
D	Acting type	D: Double acting
40	Hydraulic cylinder insider diameter	ϕ25,ϕ32,ϕ40,ϕ50,ϕ63
R	Lever arm direction	R, L, Blank
A	Cylinder body molding	

MODEL	CLAMPING FORCE AT 50 bar (KN)	CLAMPING STROKE(mm)	TOTAL STROKE(mm)	OIL CAPACITY CLAMP(cm^3)	OIL CAPACITY UNCLAMP(cm^3)	EFF.PISTON AREA CLAMP(cm^2)	EFF.PISTON AREA UNCLAMP(cm^2)	RANGE OF TEMPERATURE(°C)
LHCD01-25	1.92	22	24	11.78	8.09	4.91	3.37	-10~+60°C
LHCD01-32	2.94	28	31	24.92	18.69	8.04	6.03	-10~+60°C
LHCD01-40	4.71	30	33	41.45	34.82	12.56	10.55	-10~+60°C
LHCD01-50	7.49	30	33	64.78	54.42	19.63	16.49	-10~+60°C
LHCD01-63	11.87	30	33	102.83	92.47	31.16	28.02	-10~+60°C

Unit:mm

MODEL	A	B	C	E	C2	C1	I	J1	J	K	G1	G2	N	O	P	L	S	T	U	V	α	G4	G3
LHC01D-25	128.5	86.5	25	50	17	16	M40*1.5	60	50	37	48	18	7	23	35	ϕ5.5-ϕ9*5.5D	M6*1.0	PT1/8	26	P7	75°	4.5	26
LHC01D-32	149	97	25	57	20	18	M50*1.5	70	60	45	60	22	8	23	40	ϕ6.5- ϕ11*6.5D	M8*1.25	PT1/8	30.5	P7	75°	5	33
LHC01D-40	157	97	25	60	25	20	M55*1.5	75	65	50	66	24	10	26	42.5	ϕ6.5- ϕ11*6.5D	M8*1.25	PT1/8	33	P7	75°	4	33
LHC01D-50	174	104	25	65	30	22	M65*1.5	88	75	58	77.5	27.5	14	32	50.5	ϕ8.5- ϕ14*8.5D	M12*1.75	PT1/8	38	P7	65°	10	44
LHC01D-63	179	105	25	69	30	22	M80*1.5	108	90	70	88	32	14	35	63	ϕ8.5- ϕ14*8.5D	M12*1.75	PT1/8	48	P7	60°	10	48

LEVERAGE CLAMP

CHS-HYDRAULIC SWING CLAMP CHS-GARRA GIRATORIA DE SISTEMA HIDRÁULICO

FEATURES

The product is ideal for mass production on a special purpose machine and jig in machining center. It will greatly upgrade the production efficiency.
When the hydraulic clamp actuate, and the piston moves downward, the clamping arm will swing to a rated angle. Then it lowers until the workpiece is clamped securely.
To avoid too fast motion, a flow control valve is suggested to connect to the hydraulic swing clamp cylinder. Do not clamp workpiece while the clamp is swinging to avoid damaging the cylinder barrel and internal parts.
The cylinder body is manufactured from structural carbon steel.Inside surface is specially treated for maximum smoothness and long service life.

CARACTERÍSTICAS

El producto es ideal para la producción en masa en una máquina de propósito especial y plantilla en el centro mecanizado.
Se actualizará en gran medida la eficiencia de la producción.
Cuando la garra hidráulica se acciona y el pistón se mueve hacia abajo, el brazo de sujeción se moverá a un ángulo nominal.
Luego se reduce hasta que la pieza se sujeta con seguridad.
Para evitar un movimiento demasiado rápido, se sugiere una válvula de control de flujo para conectar a la garra giratoria de sistema hidráulico.No sujetar la pieza de trabajo mientras la garra se balancea para no dañar el cuerpo cilíndrico y las partes internas.
La parte del cilindro está fabricado en acero al carbono estructural, la superficie interna está tratada de forma especial para máxima suavidad y larga vida útil.

Max:operating pressure 70 bar
Min: operating pressure 10 bar
Double acting

Presión máx. de funcionamiento: 70 bares
Presión min. de funcionamiento: 10 bares
Doble efecto

NOTE

When you need to increase the length of the clamping arm, please don't exceed 1.5 times of the original length.

NOTA

Cuando usted necesite incrementar la longitud del brazo de sujeción, por favor, no exceda de 1.5 veces de la longitud original.

ORDERING INDICATION MÉTODO DE ETIQUETADO DEL PEDIDO

CHS - MF 25 S R × 90 E

CHS	Series	CHS
MF	Type	Blank: Line type MF: Manifold with flow control M: Manifold type FA: Flange type TB: Threaded body FAM: Flange with manifold FAMT: Flange with flow control
25	Hydraulic cylinder inside diameter	ϕ25,ϕ32,ϕ40,ϕ50,ϕ63,
S	Clamping arm type	S: Single side arm D: Double
R	Rotating direction	side arm R: Turn right L: Turn left N:0 No swing
90	Rotating angle	90° ,45° ,60°
E	E	Stroke extension-line type

MODEL	CLAMPING FORCE AT 70 bar (KN)	SWING STROKE (mm)	EXTENDED CLAMPING STROKE (mm)	STANDARD TOTAL STROKE(mm)	EXTENDED TOTAL STROKE(mm)	OIL STANDARD CAPACITY CLAMP(cm^3)	OIL STANDARD CAPACITY CLAMP(cm^3)	OIL EXTENDED CAPACITY CLAMP(cm^3)	OIL STANDARD CAPACITY UNCLAMP(cm^3)	OIL EXTENDED CAPACITY UNCLAMP(cm^3)	EFF.PISTON AREA CLAMP(cm^2)	EFF.PISTON AREA UNCLAMP(cm^2)	RANGE OF TEMPERATURE (°C)
CHS-25	1.69	9	13	-	22	-	5.21	-	10.80	-	2.37	4.91	-10~+60°C
CHS-32	3.50	11	15	30	26	41	12.74	20.09	20.90	32.96	4.9	8.04	-10~+60°C
CHS-40	6.15	11	15	30	26	41	22.41	35.34	32.66	51.50	8.62	12.56	-10~+60°C
CHS-50	9.62	13	17	34	30	47	40.41	63.31	58.89	92.26	13.47	19.63	-10~+60°C
CHS-63	15.18	13	17	34	30	47	63.78	99.92	93.48	146.45	21.26	31.16	-10~+60°C

SWING CLAMP

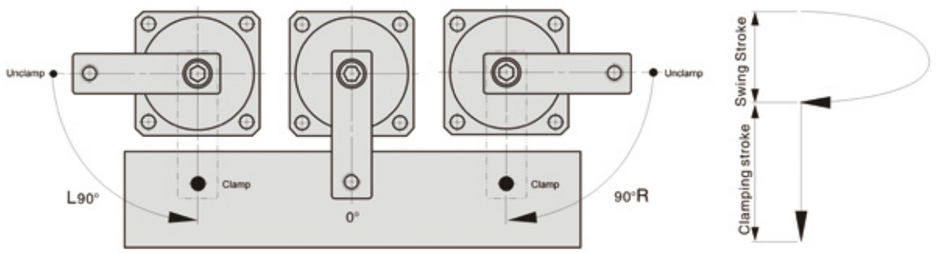

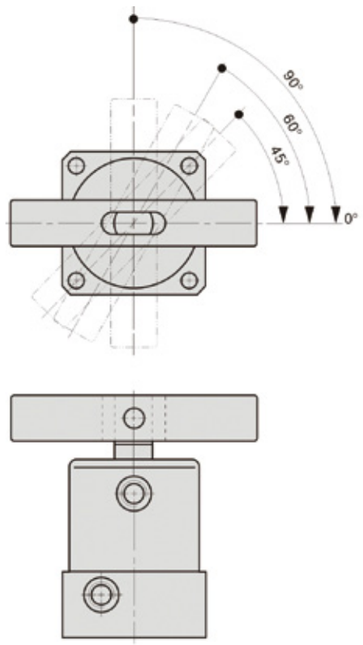

CLAMPING ARM MOUNTING METHODS

CLAMPING ARM REMOVING METHODS

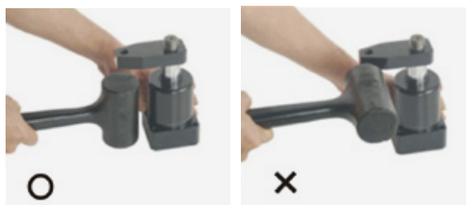

* The following drawing of Line type-D&MF-D ,double side swing clamp,all show unclamping state, swing angle 90° .

LINE TYPE - S

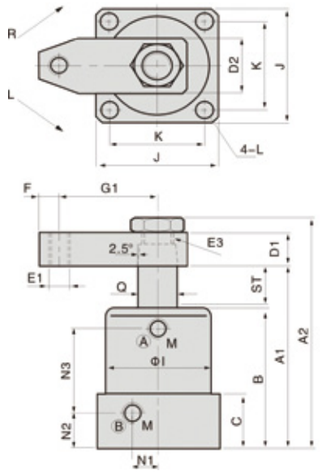

LINE TYPE - D

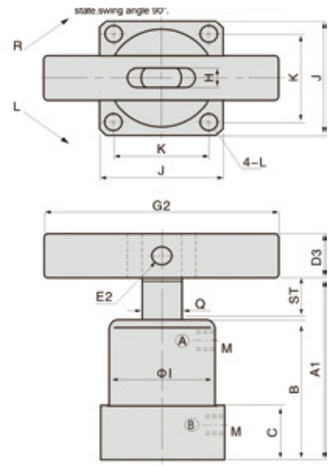

Ⓐ CLAMPING PORT Ⓑ UNCLAMPING PORT

MF-S

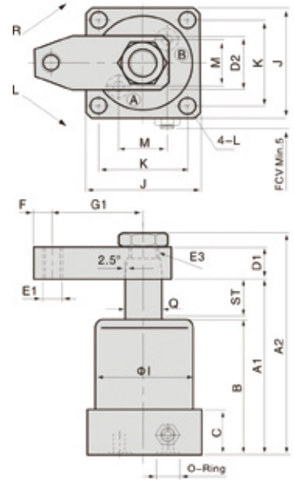

MF-D

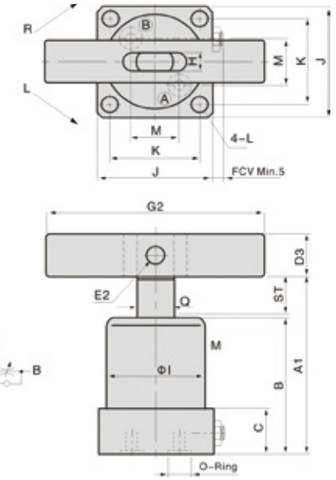

Ⓐ CLAMPING PORT Ⓑ UNCLAMPING PORT

Unit:mm

MODEL	ST: SWING/ CLAMPING	A1 UNCLAMP	A2 UNCLAMP	B	C	D1	D2	D3	E1	E2	E3	F	G1	G2	H	I	J	K	L	M	N1	N2	N3	O-RING	Q
CHS-25	22:9/13	104	127	76	27	16	27	□ 19	M10	ϕ8	M14×1.5	10	50	140	9	ϕ46	52	40	ϕ6.8	PT1/8	8	17	46	-	ϕ18
CHS-32	26:11/15	118	144	85	30	18	31	□ 22	M10	ϕ8	M16×1.5	10	55	160	10	ϕ50	56	44	ϕ6.8	PT1/8	10	19	52	-	ϕ20
CHS-40	26:11/15	123	150	90	30	18	31	□ 22	M10	ϕ10	M18×1.5	10	60	160	10	ϕ54	63	48	ϕ9	PT1/8	12	19	57	-	ϕ22.4
CHS-50	30:13/17	137	167	100	34	20	37	□ 25	M12	ϕ12	M20×1.5	12	65	180	12	ϕ66	72	57	ϕ9	PT1/4	15	21.5	63.5	-	ϕ28
CHS-63	30:13/17	142	177	105	34	23	48	□ 32	M16	ϕ15	M24×2	15	75	200	15	ϕ80	88	70	ϕ11	PT1/4	17	22	68	-	ϕ35.5
CHS-MF25	22:9/13	104	127	76	22	16	27	□ 19	M10	ϕ8	M14×1.5	10	50	140	9	ϕ46	55	42	ϕ6.8	19	-	-	-	P7	ϕ18
CHS-MF32	26:11/15	118	144	85	25	18	31	□ 22	M10	ϕ8	M16×1.5	10	55	160	10	ϕ50	57	44	ϕ6.8	21	-	-	-	P7	ϕ20
CHS-MF40	26:11/15	123	150	90	25	18	31	□ 22	M10	ϕ10	M18×1.5	10	60	160	10	ϕ54	63	48	ϕ9	23	-	-	-	P9	ϕ22.4
CHS-MF50	30:13/17	137	167	100	30	20	37	□ 25	M12	ϕ12	M20×1.5	12	65	180	12	ϕ66	72	57	ϕ9	28	-	-	-	P9	ϕ28
CHS-MF63	30:13/17	142	177	105	30	23	48	□ 32	M16	ϕ15	M24×2	15	75	200	15	ϕ80	88	70	ϕ11	32	-	-	-	P9	ϕ35.5

* The following drawing of FA-D&TB-D&M-D,double side swing clamp,all show unclamping state, swing angle 90°.

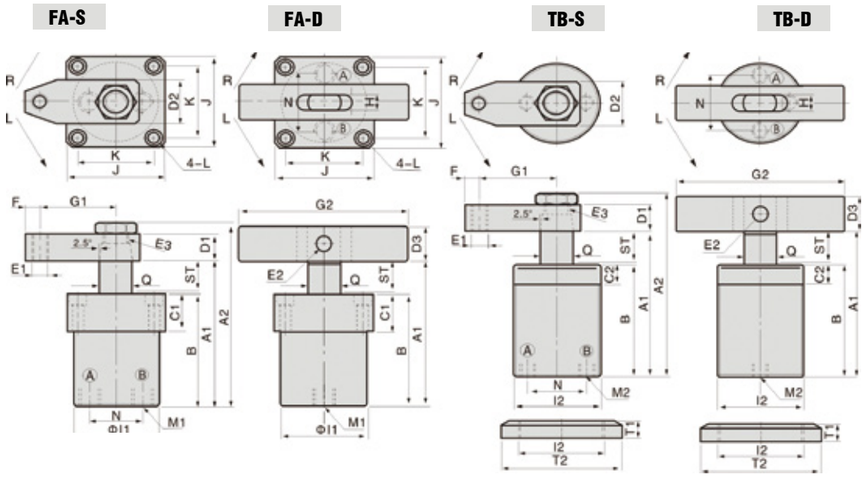

Ⓐ CLAMPING PORT Ⓑ UNCLAMPING PORT

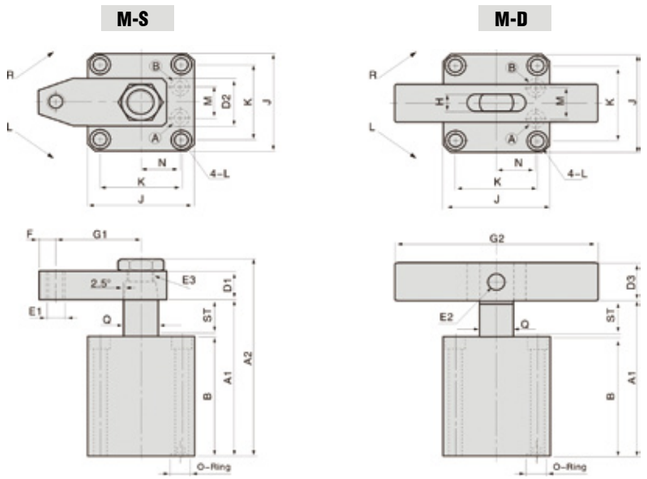

Ⓐ CLAMPING PORT Ⓑ UNCLAMPING PORT

Unit:mm

MODEL	ST: SWING/ CLAMPING	A1 UNCLAMP	A2 UNCLAMP	B	C1	C2	D1	D2	D3	E1	E2	E3	F	G1	G2	H	I1	I2	J	K	L	M1	M2	N	T1×2PCS	T2	Q
CHS-FA25	22:9/13	104	127	76	22	-	16	27	□19	M10	ϕ8	M14×1.5	10	50	140	9	ϕ45	-	53	40	ϕ6.8-ϕ10.5×6.5D	PT1/4	-	28	-	-	ϕ18
CHS-FA32	26:11/15	118	144	85	25	-	18	31	□22	M10	ϕ8	M16×1.5	10	55	160	10	ϕ50	-	57	44	ϕ6.8-ϕ10.5×6.5D	PT1/4	-	32	-	-	ϕ20
CHS-FA40	26:11/15	123	150	90	25	-	18	31	□22	M10	ϕ10	M18×1.5	10	60	160	10	ϕ58	-	69	52	ϕ9-ϕ13.5×9D	PT1/4	-	40	-	-	ϕ22.4
CHS-FA50	30:13/17	137	167	100	30	-	20	37	□25	M12	ϕ12	M20×1.5	12	65	180	12	ϕ68	-	75	58	ϕ9-ϕ13.5×9D	PT1/4	-	50		-	ϕ28
CHS-FA63	30:13/17	142	177	105	30	-	23	48	□32	M16	ϕ15	M24×2	15	75	200	15	ϕ81	-	90	70	ϕ11-ϕ17×11D	PT1/4	-	63	-	-	ϕ35.5
CHS-TB25	22:9/13	104	127	76	-	12	16	27	□19	M10	ϕ8	M14×1.5	10	50	140	9	-	M45×1.5	-	-	-	-	PT1/8	28	10	ϕ65	ϕ18
CHS-TB32	26:11/15	118	144	85	-	12	18	31	□22	M10	ϕ8	M16×1.5	10	55	160	10	-	M50×1.5	-	-	-	-	PT1/8	32	11	ϕ70	ϕ20
CHS-TB40	26:11/15	123	150	90	-	15	18	31	□22	M10	ϕ10	M18×1.5	10	60	160	10	-	M55×1.5	-	-	-	-	PT1/8	40	11	ϕ70	ϕ22.4
CHS-TB50	30:13/17	137	167	100	-	15	20	37	□25	M12	ϕ12	M20×1.5	12	65	180	12	-	M65×1.5	-	-	-	-	PT1/8	50	12	ϕ85	ϕ28

MODEL	ST: SWING/ CLAMPING	A1 UNCLAMP	A2 UNCLAMP	B	D1	D2	D3	E1	E2	E3	F	G1	G2	H	J	K	L	M	N	O-RING	Q
CHS-M25	22:9/13	104	127	76	16	27	□19	M10	ϕ8	M14 1.5	10	50	140	9	55	42	ϕ6.8-ϕ10.5×6.5D	18	20	P7	ϕ18
CHS-M32	26:11/15	118	144	85	18	31	□22	M10	ϕ8	M16 1.5	10	55	160	10	57	44	ϕ6.8-ϕ10.5×6.5D	22	22	P7	ϕ20
CHS-M40	26:11/15	123	150	90	18	31	□22	M10	ϕ10	M18 1.5	10	60	160	10	69	52	ϕ9-ϕ13.5×9D	26	26	P8	ϕ22.4
CHS-M50	30:13/17	137	167	100	20	37	□25	M12	ϕ12	M20 1.5	12	65	180	12	75	58	ϕ9-ϕ13.5×9D	32	30	P8	ϕ28

* The following drawing of FAM-D & FAMT-D,double side swing clamp,all show unclamping state, swing angle 90°.

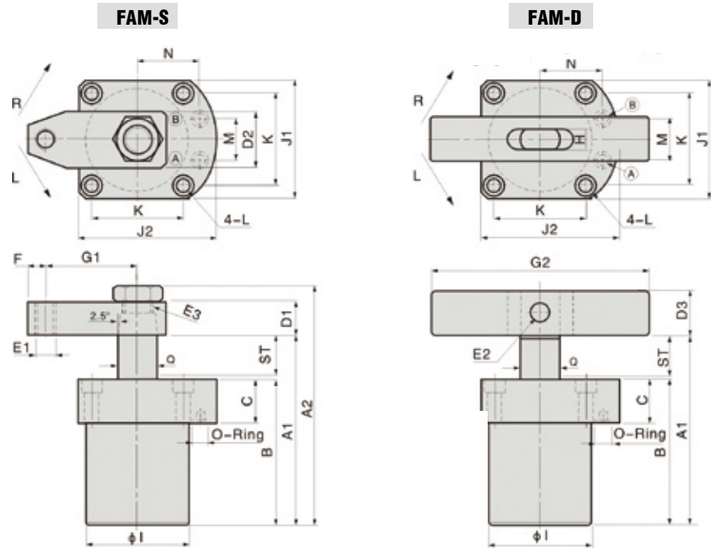

Ⓐ CLAMPING PORT Ⓑ UNCLAMPING PORT

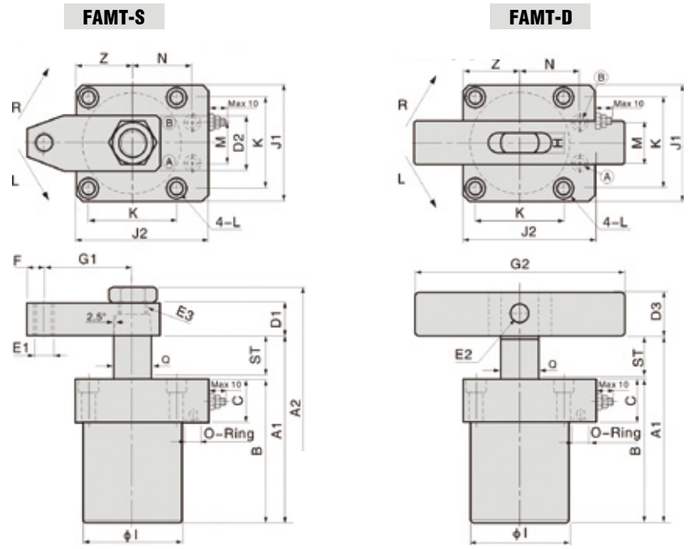

Ⓐ CLAMPING PORT Ⓑ UNCLAMPING PORT

Unit:mm

MODEL	ST: SWING/ CLAMPING	A1 UNCLAMP	A2 UNCLAMP	B	C	D1	D2	D3	E1	E2	E3	F	G1	G2	H	I	J1	J2	K	L	M	N	O-RING	Q	Z
CHS-FAM25	22:9/13	104	127	76	22	16	27	□19	M10	ϕ8	M14×1.5	10	50	140	9	ϕ45	55	64	42	ϕ6.8-ϕ10.5×6.5D	20	28	P6	ϕ18	
CHS-FAM32	26:11/15	118	144	85	25	18	31	□22	M10	ϕ8	M16×1.5	10	55	160	10	ϕ50	57	65.5	44	ϕ6.8-ϕ10.5×6.5D	22	29	P6	ϕ20	
CHS-FAM40	26:11/15	123	150	90	25	18	31	□22	M10	ϕ10	M18×1.5	10	60	160	10	ϕ58	69	79	52	ϕ9-ϕ13.5×9D	26	34.5	P9	ϕ22.4	
CHS-FAM50	30:13/17	137	167	100	30	20	37	□25	M12	ϕ12	M20×1.5	12	65	180	12	ϕ68	75	87	58	ϕ9-ϕ13.5×9D	30	39	P9	ϕ28	
CHS-FAMT25	22:9/13	104	127	76	22	16	27	□19	M10	ϕ8	M14×1.5	10	50	140	9	ϕ45	55	64	42	ϕ6.8-ϕ10.5×6.5D	20	28	P6	ϕ18	27.5
CHS-FAMT32	26:11/15	118	144	85	25	18	31	□22	M10	ϕ8	M16×1.5	10	55	160	10	ϕ50	57	65.5	44	ϕ6.8-ϕ10.5×6.5D	22	29	P6	ϕ20	28.5
CHS-FAMT40	26:11/15	123	150	90	25	18	31	□22	M10	ϕ10	M18×1.5	10	60	160	10	ϕ58	69	77	52	ϕ9-ϕ13.5×9D	26	34.5	P6	ϕ22.4	34.5
CHS-FAMT50	30:13/17	137	167	100	30	20	37	□25	M12	ϕ12	M20×1.5	12	65	180	12	ϕ68	75	87	58	ϕ9-ϕ13.5×9D	30	39	P9	ϕ28	37.5

NHS & NHTS-HYDRAULIC SWING CLAMP

NHS & NHTS-GARRA GIRATORIA DE SISTEMA HIDRÁULICO

NHS

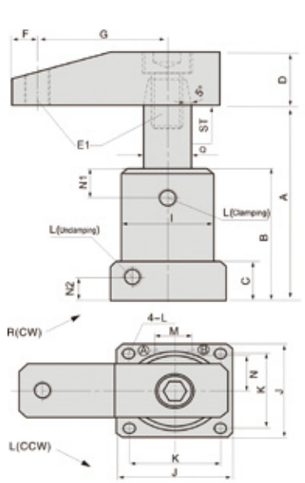

NHSD

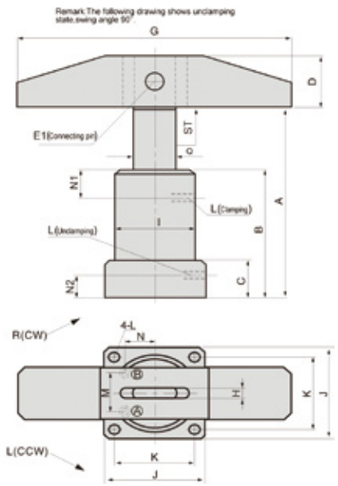

Ⓐ CLAMPING PORT Ⓑ UNCLAMPING PORT

NHTS

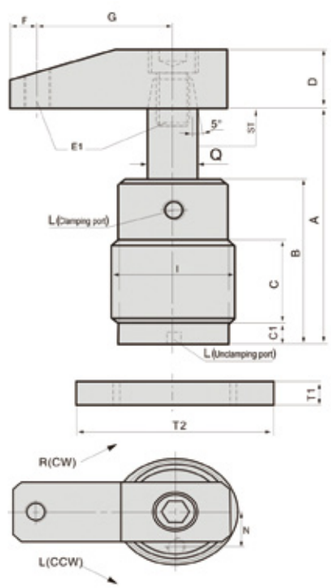

NHTSD

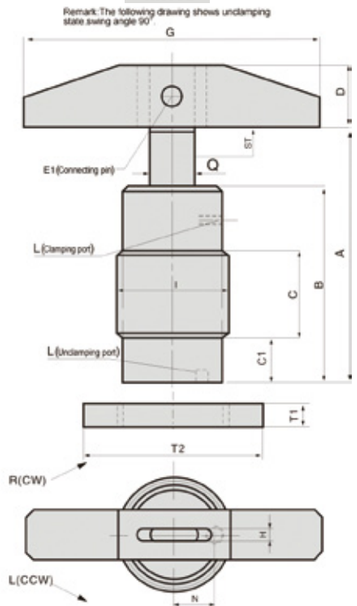

FEATURES

The hydraulic swing clamping cylinder is used to be the situation that is need to a larger clamping force,and be applied in batch quantity produce ,the automation degree is high.
The cylinger are made of carbon steel 45.

CARACTERÍSTICAS

El cilindro de la garra giratoria de sistema hidráulico se utiliza en situaciones que se necesite una fuerza de sujeción más grande, y se aplicará en lotes la cantidad de productos, el grado de automatización es alto.
El cilindro está hecho de acero al carbono 45.

Max:operating pressure 45 bar
Min: operating pressure 20 bar
Double acting

Presión máx. de funcionamiento: 45 bares
Presión min. de funcionamiento: 20 bares
Doble efecto

ORDERING INDICATION MÉTODO DE ETIQUETADO DEL PEDIDO

NHS – L 40×90 - G

NHS	Series	NHS, NHSD, NHTS, NHTSD
L	Rotating direction	Turn right R or turn left L
40	Hydraulic cylinder inside diameter	ϕ25,ϕ32,ϕ40,ϕ50,ϕ63
90	Rotating angle	Standard angle 90 Order angle 0° ,45°(±2°) 60°±2°)
G	Piping method	Blank: line type G: manifold type

MODEL	CLAMPING FORCE AT 45 bar (KN)	SWING STROKE(mm)	CLAMPING STROKE(mm)	TOTAL STROKE(mm)	OIL CAPACITY CLAMP(cm³)	OIL CAPACITY UNCLAMP(cm³)	EFF.PISTON AREA CLAMP(cm²)	EFF.PISTON AREA UNCLAMP(cm²)	RANGE OF TEMPERATURE(°C)
NHS-25	1.08	12	14	26	6.16	12.77	2.37	4.91	-10~+60°C
NHSD-25	1.08	12	14	26	6.16	12.77	2.37	4.91	-10~+60°C
NHTS-25	1.08	12	14	26	6.16	12.77	2.37	4.91	-10~+60°C
NHTSD-25	1.08	12	14	26	6.16	12.77	2.37	4.91	-10~+60°C
NHS-32	2.25	14	15	29	14.21	23.32	4.9	8.04	-10~+60°C
NHSD-32	2.25	14	15	29	14.21	23.32	4.9	8.04	-10~+60°C
NHTS-32	2.25	14	15	29	14.21	23.32	4.9	8.04	-10~+60°C
NHTSD-32	2.25	14	15	29	14.21	23.32	4.9	8.04	-10~+60°C
NHS-40	4.32	14	15	29	27.32	36.42	9.42	12.56	-10~+60°C
NHSD-40	4.32	14	15	29	27.32	36.42	9.42	12.56	-10~+60°C
NHTS-40	4.32	14	15	29	27.32	36.42	9.42	12.56	-10~+60°C
NHTSD-40	4.32	14	15	29	27.32	36.42	9.42	12.56	-10~+60°C
NHS-50	6.76	14	15	29	42.72	56.93	14.73	19.63	-10~+60°C
NHSD-50	6.76	14	15	29	42.72	56.93	14.73	19.63	-10~+60°C
NHTS-50	6.76	14	15	29	42.72	56.93	14.73	19.63	-10~+60°C
NHTSD-50	6.76	14	15	29	42.72	56.93	14.73	19.63	-10~+60°C
NHS-63	12.05	14	15	29	76.15	90.36	26.26	31.16	-10~+60°C
NHSD-63	12.05	14	15	29	76.15	90.36	26.26	31.16	-10~+60°C

Unit:mm

MODEL	ST	A	B	C	D	G	F	H	N1	L	E1	N2	K	J	Q	L	I	M	N
NHS-25	26	100	70	23	25×25	50	10	-	16.5	PT1/8	M10*1.5	15	40	50	ϕ18	ϕ6.5	ϕ45	18	15
NHS-32	29	111	76	25	25×25	55	10	-	16.5	PT1/8	M10*1.5	15.5	44	55	ϕ20	ϕ6.5	ϕ50	24	17
NHS-40	29	113.6	80	27	25×25	55	10	-	10	PT1/8	M10*1.5	18	48	62	ϕ20	ϕ8.5	ϕ54	26	20
NHS-50	29	114.5	80	27	30×30	55	10	-	11.5	PT1/8	M10*1.5	18	57	74	ϕ25	ϕ8.5	ϕ65	30	25
NHS-63	29	118	85	32	32×32	75	11	-	13	PT1/8	M12*1.75	22.5	70	88	ϕ25	ϕ10.5	ϕ80	40	30
NHSD-25	26	100	70	23	19×19	100	-	9	16.5	PT1/8	ϕ8	15	40	50	ϕ18	ϕ6.5	ϕ45	18	15
NHSD-32	29	111	76	25	22×22	120	-	10	16.5	PT1/8	ϕ8	15.5	44	55	ϕ20	ϕ6.5	ϕ50	24	17
NHSD-40	29	113.6	80	27	22×22	120	-	10	10	PT1/8	ϕ8	18	48	62	ϕ20	ϕ8.5	ϕ54	26	20
NHSD-50	29	114.5	80	27	22×22	120	-	10	11.5	PT1/8	ϕ8	18	57	74	ϕ25	ϕ8.5	ϕ65	30	25
NHSD-63	29	118	85	32	25×25	140	-	12	13	PT1/8	ϕ10	22.5	70	88	ϕ25	ϕ10.5	ϕ80	40	30

MODEL	ST	A	B	C	D	N	G	F	C1	H	L	E1	I	T2	Q	T1
NHTS-25	26	100	70	35	25×25	12.5	50	10	9	-	PT1/8	M10*1.5	M45*1.5	ϕ65	ϕ18	10
NHTS-32	29	111	76	40	25×25	12.5	55	10	10	-	PT1/8	M10*1.5	M50*1.5	ϕ70	ϕ20	11
NHTS-40	29	113.6	80	45	25×25	15	55	10	11	-	PT1/8	M10*1.5	M55*1.5	ϕ75	ϕ20	11
NHTS-50	29	114.5	80	45	30×30	16.5	55	10	11	-	PT1/8	M10*1.5	M65*1.5	ϕ85	ϕ25	12
NHTSD-25	26	100	70	35	19×19	12.5	100	-	9	9	PT1/8	ϕ8	M45*1.5	ϕ65	ϕ18	10
NHTSD-32	29	111	76	40	22×22	12.5	120	-	10	10	PT1/8	ϕ8	M50*1.5	ϕ70	ϕ20	11
NHTSD-40	29	113.6	80	45	22×22	15	120	-	11	10	PT1/8	ϕ8	M55*1.5	ϕ75	ϕ20	11
NHTSD-50	29	114.5	80	45	22×22	16.5	120	-	11	10	PT1/8	ϕ8	M65*1.5	ϕ85	ϕ25	12

NHU-HYDRAULIC SWING CLAMP NHU-GARRA GIRATORIA DE SISTEMA HIDRÁULICO

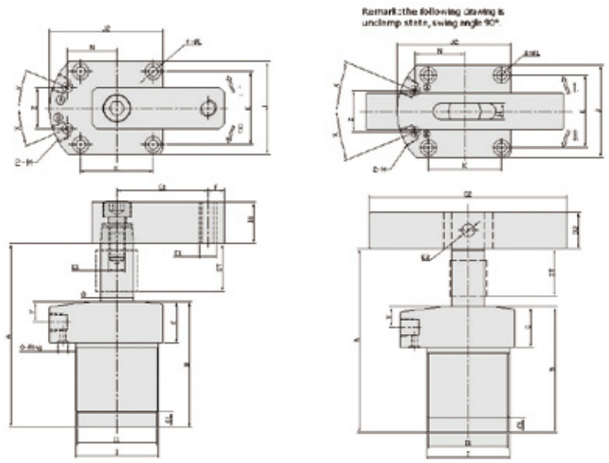

Ⓐ CLAMPING PORT Ⓑ UNCLAMPING PORT

FEATURES

The standard rotating angle is 90° and the optional rotating angles are including 0 , 45° and 60°.
The total stroke is equal to the sum of the swing stroke and the clamping stroke, and is usually used within the clamping stroke.
The type of clamping are including single side swing clamping and double side swing clamping.
The material of the cylinder body is medium carbon steel.

CARACTERÍSTICAS

El ángulo de rotación estándar es de 90° y los ángulos de rotación opcionales están incluyendo 0 , 45° y 60° . La carrera total es igual a la suma de la carrera de giro y la carrera de sujeción, y se utiliza por lo general dentro de la carrera de sujeción.
El tipo de sujeción está incluyendo garra giratoria de un solo lado y garra giratoria de doble lado.
El material del cuerpo de cilindro es de acero de carbono medio.

Max:operating pressure 45 bar
Min: operating pressure 20 bar
Double acting

Presión máx. de funcionamiento: 45 bares
Presión min. de funcionamiento: 20 bares
Doble efecto

NOTE

Please don't exceed 1.5 times of the original length, if you need to increase the length of the clamping arm.

NOTA

Cuando usted necesite incrementar la longitud del brazo de sujeción, por favor, no exceda de 1.5 veces de la longitud original.

ORDERING INDICATION MÉTODO DE ETIQUETADO DEL PEDIDO

NHU - L 40 × 90

NHU	Series	NHU
L	Rotating direction	Turn right R or turn left L
40	Hydraulic cylinder Inside diameter	ϕ32,ϕ40,ϕ50,ϕ63
90	Rotating angle	Standard angle 90°(±2°) Order angle 0 ,45°(±2°),60°(±2°)

MODEL	CLAMPING FORCE AT 45 bar (KN)	SWING STROKE(mm)	CLAMPING STROKE(mm)	TOTAL STROKE(mm)	OIL CAPACITY CLAMP(cm³)	OIL CAPACITY UNCLAMP(cm³)	EFF.PISTON AREA CLAMP(cm²)	EFF.PISTON AREA UNCLAMP(cm²)	RANGE OF TEMPERATURE(℃)
NHU-32	2.25	14	15	29	14.70	24.12	4.9	8.04	-10~+60°C
NHU-40	4.32	14	15	29	28.26	37.68	9.42	12.56	-10~+60°C
NHU-50	6.76	14	15	29	47.14	62.82	14.73	19.63	-10~+60°C
NHU-63	12.05	14	15	29	78.78	93.48	26.26	31.16	-10~+60°C

Unit:mm

MODEL	ST: SWING/ CLAMPING	A UNCLAMP	B	C	C1	D1	D2	E1	E2	F	G1	G2	H	I	I1	J1	J2	K	L	M	N	Z	X	Y	O-RING	Q
NHU-32	29:14/15	111	76	25	9	□25	□22	M10	ϕ8	10	55	120	10	M50*1.5	ϕ48	56	69	44	ϕ6.5- ϕ10.5*6.5D	PT1/8	30	24.9	22.5°	12.5	P5	ϕ20
NHU-40	29:14/15	113.6	80	27	9	□25	□22	M10	ϕ8	10	55	120	10	M55*1.5	ϕ53	62	71.5	48	ϕ6.5- ϕ10.5*6.5D	PT1/8	31.4	26	22.5°	14	P5	ϕ20
NHU-50	29:14/15	114.5	80	27	9	□32	□22	M12	ϕ8	11	75	120	10	M65*1.5	ϕ63	74	87	57	ϕ8.5-ϕ 14*9D	PT1/8	37.6	27.4	20°	14	P7	ϕ25
NHU-63	29:14/15	118	85	32	9	□32	□25	M12	ϕ10	11	75	140	12	M80*1.5	ϕ77	88	105.5	70	ϕ11- ϕ16.5*11D	PT1/8	46	38	22.5°	19	P7	ϕ25

NHSU-HYDRAULIC SWING CLAMP NHSU-GARRA GIRATORIA DE SISTEMA HIDRÁULICO

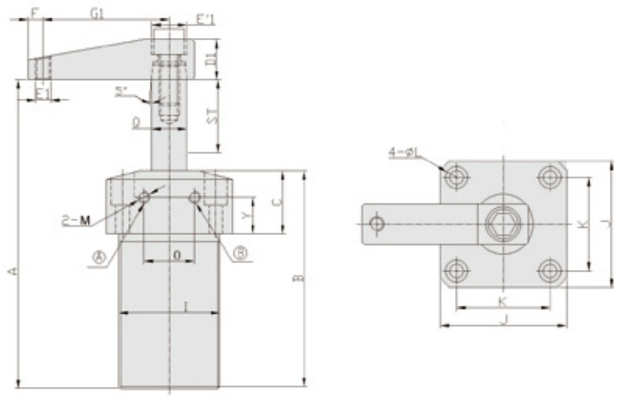

Ⓐ CLAMPING PORT Ⓑ UNCLAMPING PORT

FEATURES

For recessed installation in the fixture. Oil goes into and goes out from the flange hole.
The material of the cylinder body is 45#Steel .Surface is treated with hard coat for wear resistance
The four screw holes on the flange are used for installation.

CARACTERÍSTICAS

Para instalación empotrada en el aparato. Entrada y salida del aceite del orificio de la brida.
El material del cuerpo del cilindro es de 45 # de acero. La superficie es tratada con recubrimiento duro para resistencia al desgaste.
Los cuatro orificios para tornillos de la brida se utilizan para la instalación.

Max:operating pressure 45 bar
Min: operating pressure 20 bar
Double acting

Presión máx. de funcionamiento: 45 bares
Presión min. de funcionamiento: 20 bares
Doble efecto

NOTE

Please don't exceed 1.5 times of the original length, if you need to increase the length of the clamping arm.

NOTA

Cuando usted necesite incrementar la longitud del brazo de sujeción, por favor, no exceda de 1.5 veces de la longitud original.

ORDERING INDICATION MÉTODO DE ETIQUETADO DEL PEDIDO

NHSU - L 40 × 90

NHSU	Series	NHSU
L	Rotating direction	Turn right R or turn left L
40	Hydraulic cylinder Inside diameter	ϕ25, ϕ32, ϕ40, ϕ50, ϕ63
90	Rotating angle	Standard angle 90°(±2°) Order angle 0°,45°(±2°),60°(±2°)

MODEL	CLAMPING FORCE AT 45 bar (KN)	SWING STROKE(mm)	CLAMPING STROKE(mm)	TOTAL STROKE(mm)	OIL CAPACITY CLAMP(cm³)	OIL CAPACITY UNCLAMP(cm³)	EFF.PISTON AREA CLAMP(cm²)	EFF.PISTON AREA UNCLAMP(cm²)	RANGE OF TEMPERATURE(℃)
NHSU-25	1.55	13	14	27	9.10	13.26	3.37	4.91	-10~+60°C
NHSU-32	2.77	16	14	30	18.09	24.12	6.03	8.04	-10~+60°C
NHSU-40	4.84	15	15	30	31.65	37.68	10.55	12.56	-10~+60°C
NHSU-50	7.57	17	15	32	52.77	62.82	16.49	19.63	-10~+60°C
NHSU-63	12.96	15	15	30	84.06	93.48	28.02	31.16	-10~+60°C

Unit:mm

MODEL	ST	A	B	C	D1	E1	F	G1	M	E'1	K	J	I	O	L	Y	Q
NHSU-25	27	118.5	86.5	25	16*16	M6	6	50	M6	M8	37	50	M40*1.5	20	ϕ5.5-ϕ9*5.5D	11.5	ϕ14
NHSU-32	30	133.5	97.5	25	19*19	M8	9	60	PT1/8	M8	45	60	M50*1.5	22	ϕ6.5- ϕ10.5*6.5D	13	ϕ16
NHSU-40	30	133.5	97.5	25	19*19	M8	9	70	PT1/8	M8	50	65	M55*1.5	26	ϕ6.5- ϕ10.5*6.5D	13	ϕ16
NHSU-50	32	141	104	25	25*25	M12	10	80	PT1/8	M10	58	75	M65*1.5	32	ϕ8.5-ϕ14*9D	11	ϕ20
NHSU-63	30	140	105	25	25*25	M12	10	90	PT1/8	M10	70	90	M80*1.5	35	ϕ8.5-ϕ14*9D	11	ϕ20

CHTB-HYDRAULIC PUSH PULL CYLINDER

CHTB-HIDRÁULICA DE APRIETE Y TRACCIÓN CILINDRO

FEATURES

Compact construction for space saving. Ideal for application in a restricted space.
Standardized specifications. Direct installation without need of any further accessories for saving cost.
The cylinder barrel is manufactured from structural carbon steel. Internal surface is specially treated.
Smoothness and long service life.
Axial and side manifold type without upgrading pipe made the cylinder appearance better.

CARACTERÍSTICAS

Diseño compacto para ahorrar espacio. Ideal para su aplicación en espacios reducidos.
Especificaciones estandarizadas. Instalación directa y sin necesidad de accesorios adicionales para ahorrar costos.
El cuerpo del cilindro se fabrica a partir de acero al carbono estructural. La superficie interna se trata de manera especial. Suavidad y larga vida útil.
Colector axial y lateral sin tubo de modernización hacen un cilindro mejor.

Max:operating pressure 140 bar
Min: operating pressure 5 bar

Presión máx. de funcionamiento: 140 bares
Presión mín. de funcionamiento: 5 bares

NOTE

You are welcome to order the special strokes under request.

NOTA

Usted puede comprar la carrera especial bajo del pedido.

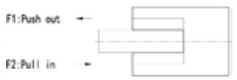

ORDERING INDICATION MÉTODO DE ETIQUETADO DEL PEDIDO

CHTB – SD 32 X 20 N

CHTB	Series	CHTB
SD	Mounting type	SD: Axial single end rod type SW: Axial double end rod type SDMA: Axial front manifold type SDMB: Axial back manifold type LA: Lateral single end rod type LW: Lateral double end rod type LAM: Lateral manifold single end rod type LWM: Lateral manifold double end rod type
32	Hydraulic cylinder inside diameter	ϕ20,ϕ25,ϕ32,ϕ40,ϕ50 ϕ63,ϕ80
20	Standard stroke	Please refer to the <stroke specification>
N	Rod end type	N:Female thread N W:Male thread W

CHTM - SD 32 X 20 N - S1

CHTM	Series	CHTM: Magnetic-type
SD	Mounting type	SD: Single end rod type SW: Double end rod type
32	Hydraulic cylinder inside diameter	ϕ32,ϕ40,ϕ50,ϕ63,ϕ80
20	Standard stroke	10,20,30,40,50
N	Rod end type	N:Female thread N W:Male thread W
S1	Sensor switch	1Pcs of S1, 2Pcs of S2 Pressure DC 4-24V AC4-120V Electricity 5-40mA

HYDRAULIC CYLINDER INSIDE DIAMETER(mm)	PISTON DIAMETER(mm)	PRESSURE AREA(cm²)		OPERATION PRESSURE(bar)										RANGE OF TEMPERATURE(°C)
				10		35		70		100		140		
		F1	F2	F1	F2	F1	F2	F1	F2	F1	F2	F1	F2	-10~+70°C
ϕ 20	ϕ 12	3.14	2.01	31	20	110	71	220	141	314	201	440	281	-10~+70°C
ϕ 25	ϕ 14	4.91	3.37	49	34	172	118	344	236	491	337	687	472	-10~+70°C
ϕ 32	ϕ 20	8.04	4.9	80	49	281	172	563	343	804	490	1126	686	-10~+70°C
ϕ 40	ϕ 25	12.57	7.66	126	77	440	268	880	536	1257	766	1760	1072	-10~+70°C
ϕ 50	ϕ 30	19.64	12.57	196	126	687	440	1375	880	1964	1257	2750	1760	-10~+70°C
ϕ 63	ϕ 35	31.17	21.55	312	216	1091	754	2182	1509	3117	2155	4364	3017	-10~+70°C
ϕ 80	ϕ 45	50.27	34.37	503	344	1759	1203	3519	2406	5027	3437	7038	4812	-10~+70°C

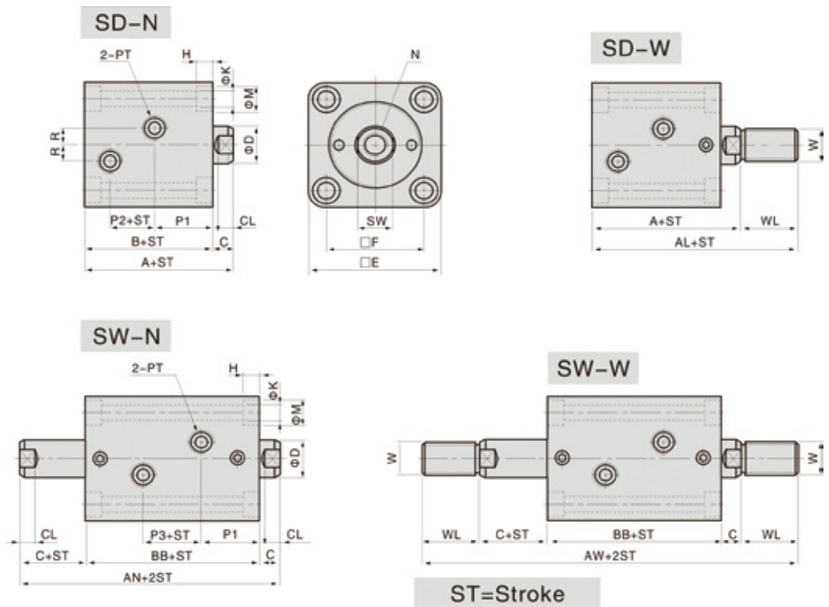

CHTB Hydraulic axial mounting type SD&SW

Unit:mm

BORE	A	AL	AN	AW	B	BB	C	CL	D	SW	E	F	H	K	M	N	W	WL	P1	P2	P3	R	PT
ϕ20	51	71	–	–	43	–	8	6	12	10	42	30	5.5	5.6	9	M8*1.25*12D	M10*1.25	20	22.5	11	–	5	1/8
ϕ25	53	75	–	–	45	–	8	6	14	12	48	36	5.5	5.6	9	M10*1.5*15D	M12*1.25	22	23	12	–	5	1/8
ϕ32	64	89	89	139	54	69	10	7	20	17	62	47	6.5	6.8	11	M12*1.75*15D	M16*1.5	25	28	14	13	10	1/4
ϕ40	65	95	90	150	55	70	10	7	25	22	70	52	9	9	14	M16*2.0*20D	M22*1.5	30	28	15	14	10	1/4
ϕ50	71	106	97	167	60	75	11	8	30	27	80	58	11	11	18	M20*2.5*25D	M26*1.5	35	29.5	18	16	10	1/4
ϕ63	80	120	108	188	67	82	13	10	35	32	94	69	13	13	20	M27*3.0*35D	M30*1.5	40	31	20	20	10	3/8
ϕ80	95	140	127	217	78	93	17	14	45	41	114	86	15	15	22	M30*3.5*35D	M39*1.5	45	33	27	27	15	3/8

Specification

TYPE BORE STROKE	SD SDM							SW LA LW				LAM LWM			
	ϕ 20	ϕ 25	ϕ32	ϕ40	ϕ 50	ϕ63	ϕ80	ϕ32	ϕ40	ϕ50	ϕ63	ϕ 32	ϕ40	ϕ50	ϕ 63
5	–	–	●	●	●	●	●	–	–	–	–	–	–	–	–
10	●	●	●	●	●	●	●	●	●	●	●	–	–	–	–
15	–	–	●	●	●	●	●	–	–	–	–	–	–	–	–
20	●	●	●	●	●	●	●	●	●	●	●	●	●	●	●
25	–	–	●	●	●	●	●	–	–	–	–	–	–	–	–
30	●	●	●	●	●	●	●	●	●	●	●	●	●	●	●
40	–	●	●	●	●	●	●	●	●	●	●	●	●	●	●
50	–	●	●	●	●	●	●	●	●	●	●	●	●	●	●

Remark: Please extend 5mm of the cylinder body length with "—" mark.

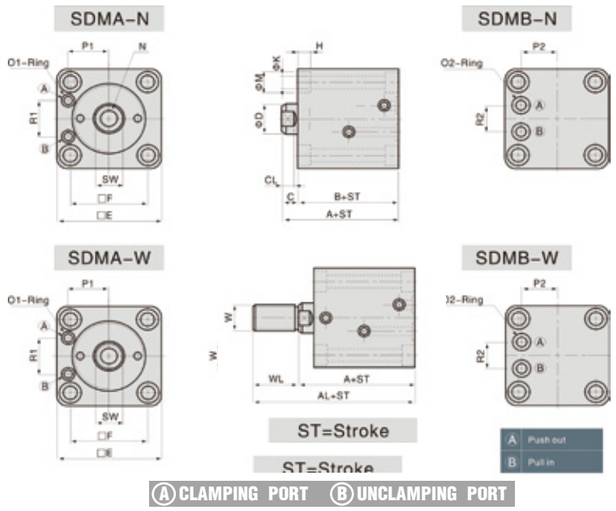

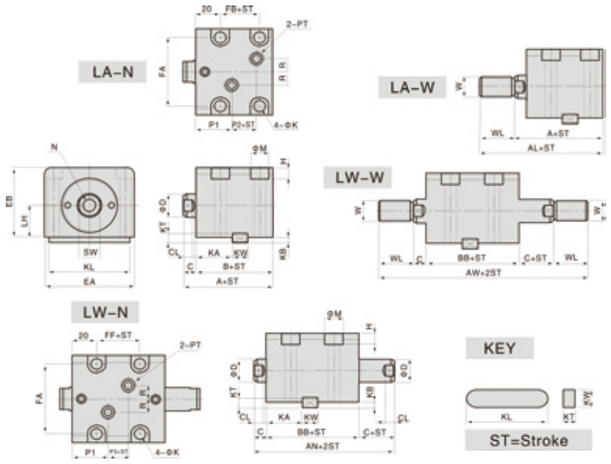

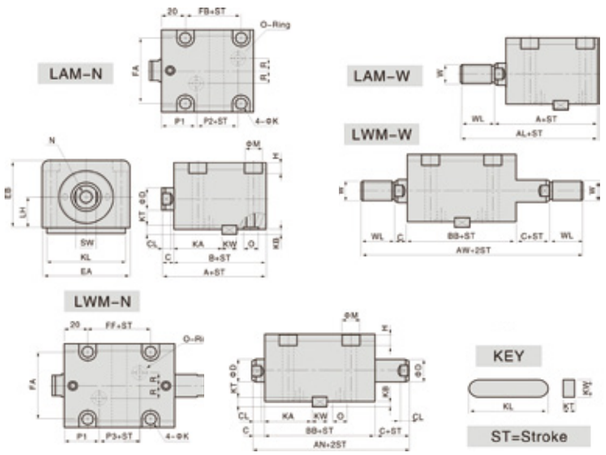

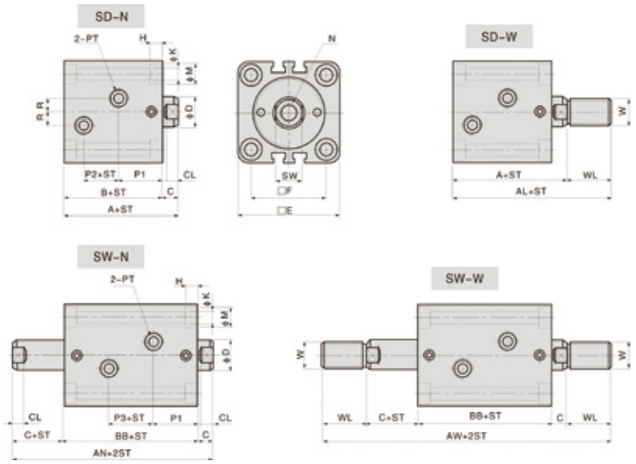

CHTB Hydraulic manifold type SDMA & SDMB.

Unit:mm

BORE	A	AL	B	C	CL	D	SW	E	F	H	K	M	N	W	WL	SDMA			SDMB		
																P1	R1	O1	P2	R2	O2
ϕ20	51	71	43	8	6	12	10	42	30	5.5	5.6	9	M8*1.25*12D	M10*1.25	20	16.5	13	P3	13	11	P5
ϕ25	53	75	45	8	6	14	12	48	36	5.5	5.6	9	M10*1.5*15D	M12*1.25	22	19.5	18	P4	16	13	P7
ϕ32	64	89	54	10	7	20	17	62	47	6.5	6.8	11	M12*1.75*15D	M16*1.5	25	24	24	P6	20	20	P9
ϕ40	65	95	55	10	7	25	22	70	52	9	9	14	M16*2.0*20D	M22*1.5	30	27	26	P6	24	20	P9
ϕ50	71	106	60	11	8	30	27	80	58	11	11	18	M20*2.5*25D	M26*1.5	35	32	27	P6	29	20	P9
ϕ63	80	120	67	13	10	35	32	94	69	13	13	20	M27*3.0*35D	M30*1.5	40	38	35	P8	35	26	P11
ϕ80	95	140	78	17	14	45	41	114	86	15	15	22	M30*3.5*35D	M39*1.5	45	47	45	P11	44	30	P11

CHTB Hydraulic manifold type LAM & LWM.

BORE	A	AL	AN	AW	B	BB	C	CL	D	SW	EA	EB	LH	FA	FB	FF	H	K	M	N	W	WL	P1	P2	P3	R	O	KW	KT	KL	KA	KB
32	64	89	89	139	54	69	10	7	20	17	70	56	25	56	24	32	9	9	14	M12*1.75*15D	M16*1.5	25	28	14	13	10	P9	12	8	63	38	4.5
40	65	95	90	150	55	70	10	7	25	22	80	64	29	62	23	32	11	11	18	M16*2.0*20D	M22*1.5	30	28	15	14	10	P9	12	8	70	38	4.5
50	71	106	97	167	60	75	11	8	30	27	94	74	34	74	27	35	13	13	20	M20*2.5*25D	M26*1.5	35	29.5	18	16	10	P11	14	9	80	40	5
63	80	120	108	188	67	82	13	10	35	32	114	89	42	90	32	42	15	15	22	M27*3.0*35D	M30*1.5	40	31	20	20	10	P11	16	10	100	42	5.5

CHTB Hydraulic side mounting type LA & LW.

Unit:mm

BORE	A	AL	AN	AW	B	BB	C	CL	D	SW	EA	EB	LH	FA	FB	FF	H	K	M	N	W	WL	P1	P2	P3	R	PT	KW	KT	KL	KA	KB
ϕ32	64	89	89	139	54	69	10	7	20	17	70	56	25	56	24	32	9	9	14	M12*1.75*15D	M16*1.5	25	28	14	13	10	1/4	12	8	63	28	4.5
ϕ40	65	95	90	150	55	70	10	7	25	22	80	64	29	62	23	32	11	11	18	M16*2.0*20D	M22*1.5	30	28	15	14	10	1/4	12	8	70	28	4.5
ϕ50	71	106	97	167	60	75	11	8	30	27	94	74	34	74	27	35	13	13	20	M20*2.5*25D	M26*1.5	35	29.5	18	16	10	1/4	14	9	80	29	5
ϕ63	80	120	108	188	67	82	13	10	35	32	114	89	42	90	32	42	15	15	22	M27*3.0*35D	M30*1.5	40	31	20	20	10	1/4	16	10	100	31	5.5

CHTM Hydraulic magnetic type SD & SW.

BORE	A	AL	AN	AW	B	BB	C	CL	D	SW	E	F	H	K	M	N	W	WL	P1	P2	P3	R	PT
ϕ32	83	108	104	154	73	84	10	7	20	17	62	47	6.5	6.8	11	M12*1.75*15D	M16*1.5	25	27	29	30	10	1/4
ϕ40	80	110	101	161	70	81	10	7	25	21	70	52	9	9	14	M16*2.0*20D	M22*1.5	30	27	27	27	10	1/4
ϕ50	86	121	109	179	75	87	11	8	30	27	80	58	11	11	18	M20*2.5*25D	M24*1.5	35	28	31	31	10	1/4
ϕ63	97	142	120	210	84	94	13	10	35	32	94	69	13	13	20	M27*3.0*35D	M30*1.5	45	30	36	34	10	1/4
ϕ80	112	167	140	250	95	106	17	14	40	37	114	86	15	15	22	M30*3.5*35D	M36*1.5	55	35	38	36	15	3/8

HBC-HYDRAULIC PUSH PULL CYLINDER HBC-HIDRÁULICA DE APRIETE Y TRACCIÓN CILINDRO

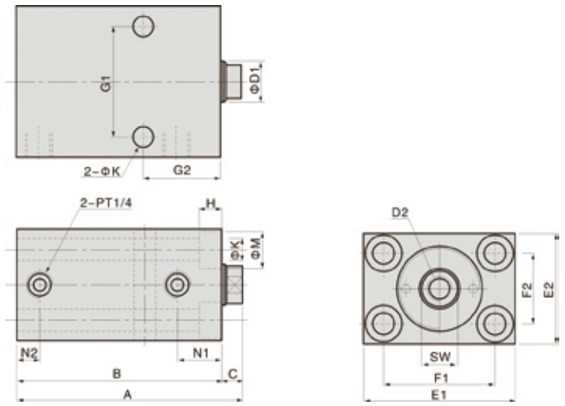

FEATURES

The series of hydraulic cylinder complies with Germany specifications. Employ imported oil seal for outstanding pressure resistance. Standardized specification and full interchangeability.
Axial and side mounting type available. Single and double acting available.

Max:operating pressure 300 bar
Min: operating pressure 5 bar
Double acting and single acting

CARACTERÍSTICAS

La serie de cilindro hidráulico cumple con las especificaciones de Alemania. Emplear el sello de aceite importado de resistencia para la presión excepcional. Especificación estandarizada y completa intercambiabilidad.
Tipo axial y montaje lateral disponibles. Efecto simple y doble disponible.

Presión máx. de funcionamiento: 300 bares
Presión min. de funcionamiento: 5 bares
Doble efecto de simple efecto

ORDERING INDICATION MÉTODO DE ETIQUETADO DEL PEDIDO

HBC – 32 S 20

HBC	Series	HBC
32	Hydraulic cylinder inside diameter	ϕ16, ϕ25, ϕ32, ϕ40
S	Acting type	S Single-acting D Double-acting
20	Standard stroke	Refer to the dimension table

HYDRAULIC CYLINDER INSIDE DIAMETER(mm)	PISTON DIAMETER(mm)	PRESSURE AREA(cm²)		OPERATION PRESSURE(bar)			
				100		300	
		F1	F2	F1	F2	F1	F2
ϕ16	10	2.01	1.22	201	122	603	366
ϕ25	16	4.91	2.9	491	290	1473	870
ϕ32	20	8.04	4.9	804	490	2412	1470
ϕ40	25	12.57	7.66	1257	766	3771	2298

DIMENSION TABLE Unit:mm

BORE	SINGLE ACTING			DOUBLE ACTING			C	D1	D2	SW	E1	E2	F1	F2	G1	G2	H	K	M	N1	N2
	STROKE	A	B	STROKE	A	B															
ϕ16	8	62	56	16	62	56	6	10	M6×1.0 12Deep	8	60	35	40	22	30	30	6.5	6.8	11	16.5	11
ϕ16	20	97	91	50	97	91	6	10	M6×1.0 12Deep	8	60	35	40	22	30	30	6.5	6.8	11	16.5	11
ϕ25	8	71	64	20	71	64	7	16	M10×1.5 15Deep	13	65	45	50	30	50	33	9	9	14	18	11
ϕ25	20	101	94	50	101	94	7	16	M10×1.5 15Deep	13	65	45	50	30	50	33	9	9	14	18	11
ϕ32	10	85	75	25	85	75	10	20	M12×1.75 15Deep	17	75	55	55	35	55	38	11	11	18	22	11
ϕ32	20	110	100	50	110	100	10	20	M12×1.75 15Deep	17	75	55	55	35	55	38	11	11	18	22	11
ϕ40	10	89	79	25	89	79	10	25	M16×2.0 25Deep	22	85	63	63	40	63	40	11	11	18	24	11
ϕ40	20	114	104	50	114	104	10	25	M16×2.0 25Deep	22	85	63	63	40	63	40	11	11	18	24	11

PUSH-PULL CYLINDER

CTC-THREADED CYLINDERS CTC-ELEMENTO DE SOPORTE HIDRÁULICO EN ROSCADO CILINDRO

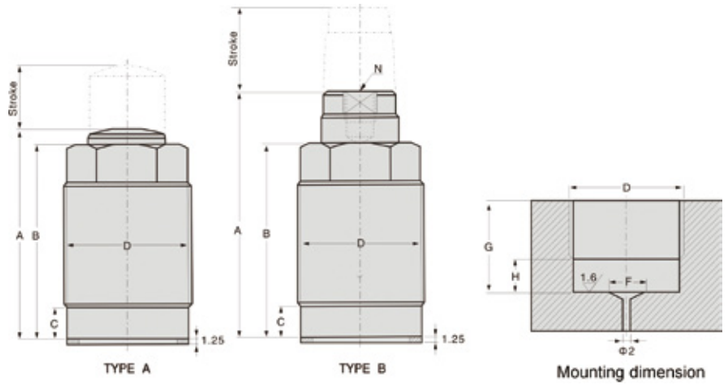

FEATURES

The Thread-body single acting hydraulic cylinder use imported oil seal and accessories to guaranted the quality . No oil leakage while clamping in high pressure for long time.
The volume of the thread-body single acting hydraulic cylinder is small. It can be used in a small space in the fixture.This hydraulic cylinder is used to extend out, and then spring returns, but it can't be used for pulling back. The angle degree between the cylinder and workpiece could not be larger than 10 while installing.The bottom of the cylinder barrel needs a leakage-proof gasket.

Max:operating pressure 250 bar
Min: operating pressure 20 bar
Single acting

CARACTERÍSTICAS

El cilindro hidráulico de simple efecto con cuerpo roscado utiliza sellos de aceite y accesorios importados para garantizar la calidad.
No hay fugas de aceite durante la sujeción prolongada a altas presiones.
El cilindro hidráulico de simple efecto con cuerpo roscado tiene un volumen reducido. Ocupa poco espacio en el portapiezas.
Este cilindro hidráulico sólo se puede utilizar para extender, no se puede retraer. El retorno se efectúa por resorte. Durante la instalación, el grado del ángulo entre el cilindro y la pieza de trabajo no debe ser mayor de 10 .
La parte inferior del cuerpo del cilindro necesita una junta obturadora a prueba de fugas.

Presión máx. de funcionamiento: 250 bares
Presión min. de funcionamiento: 20 bares
Simple efecto

ORDERING INDICATION MÉTODO DE ETIQUETADO DEL PEDIDO

CTC – 16 A

CTC	Series	CTC
16	Piston diameter	ϕ12 ϕ16 ϕ20 ϕ25
A	Type	Divide A type and B type

MODEL	CLAMPING FORCE AT 250 bar (KN)	TOTAL STROKE(mm)	OIL CAPACITY CLAMP(cm³)	EFF.PISTON AREA CLAMP(cm²)	RANGE OF TEMPERATURE(°C)
CTC-12A	4.43	10	2.14	1.77	-10~+70°C
CTC-16A	7.08	12	4.24	2.83	-10~+70°C
CTC-20A	10.38	15	7.29	4.15	-10~+70°C
CTC-25A	15.38	16	11.85	6.15	-10~+70°C
CTC-12B	4.43	10	2.14	1.77	-10~+70°C
CTC-16B	7.08	12	4.24	2.83	-10~+70°C
CTC-20B	10.38	15	7.29	4.15	-10~+70°C
CTC-25B	15.38	16	11.85	6.15	-10~+70°C

Unit:mm

MODEL	A	B	C	D	F	G	H	N	ST
CTC-12A	38	36	7	M22×1.5	12	16	6	-	10
CTC-16A	46.5	44.5	8	M26×1.5	16	20	7	-	12
CTC-20A	57.5	51	8	M30×1.5	20	24	7	-	15
CTC-25A	58.5	55	11	M38×1.5	25	28	10	-	16
CTC-12B	45	36	7	M22×1.5	12	16	6	M6×1.0	10
CTC-16B	52	44.5	8	M26×1.5	16	20	7	M6×1.0	12
CTC-20B	64.5	51	8	M30×1.5	20	24	7	M8×1.25	15
CTC-25B	67.5	55	11	M38×1.5	25	28	10	M8×1.25	16

THREADED CYLINDER

CSP-HYDRAULIC SUPPORT CLAMP CSP-ELEMENTO DE SOPORTE HIDRÁULICO

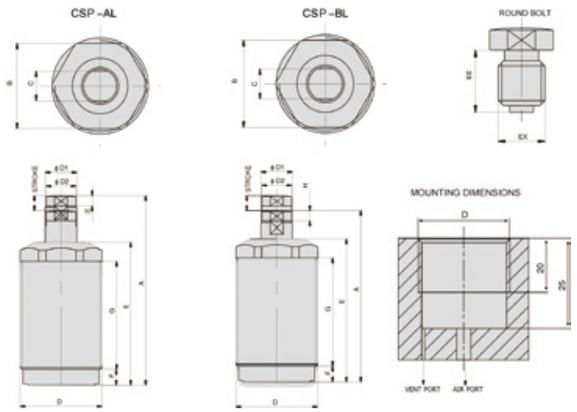

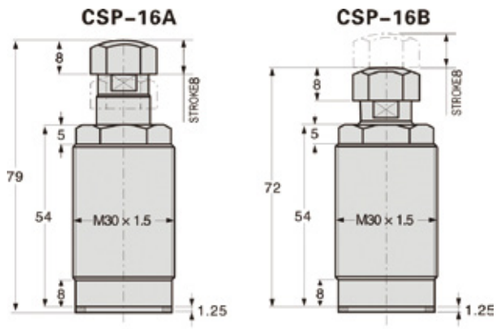

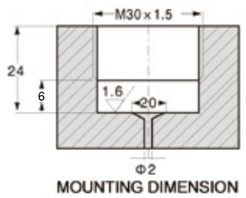

MOUNTING DIMENSION

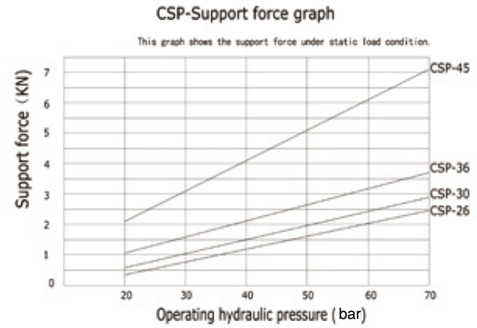

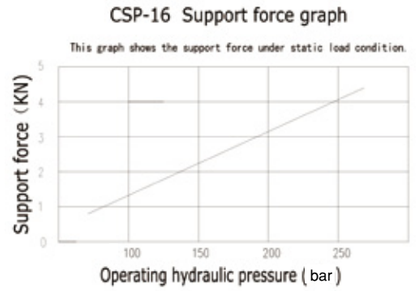

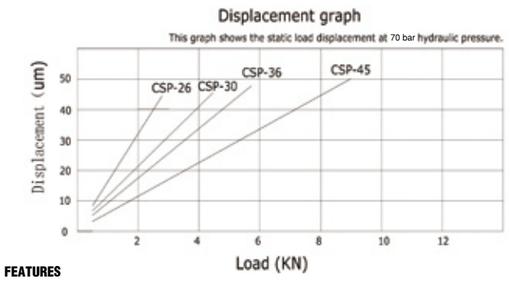

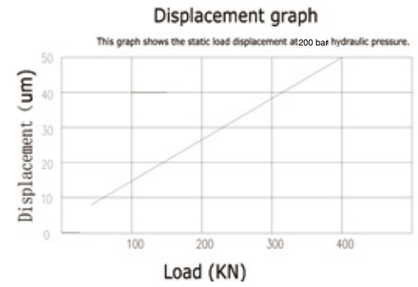

FEATURES

The working pressure of supporting cylinder is from 20 to 70 bar, with clamp cover and double acting piston, taking the low pressure on the oil to gain high supporting pressure.
The contact strength between piston rod and the work pieces is small (0.3-0.87 bar), and it can be applied on the various types of work pieces.
The size is small (four kinds, M26-M45. Large caliber, high supporting strength, can work steadily within the low pressure.) No need to change the size of fixture plate, and can be installed in small space.

CARACTERÍSTICAS

La presión de trabajo del cilindro de soporte es de 20 a 70 bares, con la cubierta de la grapa y el pistón de doble acción, tomando la baja presión en el aceite para obtener alta presión de apoyo. La fuerza de contacto entre la biela del pistón y las piezas de trabajo es pequeña (0.3-0.87 bares), y se puede aplicar sobre los diferentes tipos de piezas de trabajo.
El tamaño es pequeño (cuatro tipos, M26-M45. Grueso calibre, alta resistencia de soporte, puede trabajar de manera constante en baja presión.). No es necesario cambiar el tamaño de la placa de fijación, y puede ser instalado en un espacio pequeño.

LOW PRESSURE
Max:operating pressure 70 bar
Min: operating pressure 20 bar
Presión máx. de funcionamiento: 70 bares
Presión min. de funcionamiento: 20 bares

HIGH PRESSURE
Max:operating pressure 250 bar
Min: operating pressure 100 bar
Presión máx. de funcionamiento: 250 bares
Presión min. de funcionamiento: 100 bares

Single acting
Simple efecto

ORDERING INDICATION MÉTODO DE ETIQUETADO DEL PEDIDO

CSP - 26AL - C-L

CSP	Series	CSP
26	Hydraulic cylinder inside diameter	ϕ26,ϕ30,ϕ36,ϕ45
AL	Type	Low pressure AL: type A BL: type B High pressure A: type A B: type B
C		version
L	Plunger spring force	L:low spring H:high spring

NOTE

Columns fortress cannot exert eccentric load.
Can't exert overloaded.
Can't turn the piston rod when it's locking state.

NOTA

Las columnas no puede ejercer carga excéntrica.
No se puede ejercer sobrecarga
No se puede girar el pistón cuando está en estado bloqueado.

Type A: Supporting with the spring, the spring is used to control a clamping force when the piston rod extends to a highest support position, then clamps the work piece and lock the piston in a supporting condition .

Type B: Supporting with oil pressure, it is operated by means of oil pressure and is keeping in a supporting condition when being filled with oil and clamp the work piece.

Tipo A: Soporte con resorte, el resorte se utiliza para controlar una fuerza de sujeción cuando la biela del pistón se extiende a una posición más alta sujetando la pieza de trabajo.

Tipo B: Soporte con la presión de hidraulico, de se opera por medio de la presión del aceite y es manteniendo la posición de sujeto, cuando se llena con aceite sujetando la pieza de trabajo.

Low pressure

MODEL	CLAMPING FORCE AT 70 bar (KN)	CLAMPING FORCE AT 20 BAR (KN)	STROKE(mm)	OLL CAPACITY(cm³)	PISTON AREA(cm²)
CSP-26AL	2.30	0.39	5.5	0.30	0.79
CSP-26BL	2.30	0.39	5.5	0.30	0.79
CSP-30AL	2.70	0.6	8	0.50	1.13
CSP-30BL	2.70	0.6	8	0.50	1.13
CSP-36AL	3.70	1.2	8	0.60	1.54
CSP-36BL	3.70	1.2	8	0.60	1.54
CSP-45AL	6.80	2.1	10	1.30	2.01
CSP-45BL	6.80	2.1	10	1.30	2.01

High pressure

MODEL	CLAMPING FORCE AT 250 bar (KN)	CLAMPING FORCE AT 100 BAR (KN)	STROKE(mm)	OLL CAPACITY(cm³)	PISTON AREA(cm²)
CSP-16A	4.10	1.4	8	0.60	2.01
CSP-16B	4.10	1.4	8	0.60	2.01

Unit:mm

MODEL	A	B	C	D	E	F	G	H	D1	D2	EE	EX
CSP-26AL	71.5	22	9	M26*1.5	57	6	44	3.6	ϕ10	ϕ 9.8	10	M8
CSP-26BL	66	22	9	M26*1.5	57	6	44	3.6	ϕ10	ϕ 9.8	10	M8
CSP-30AL	81	24	10	M30 1.5	62	6	48	5.1	ϕ12	ϕ11.5	10.9	M8
CSP-30BL	73	24	10	M30*1.5	62	6	48	5.1	ϕ12	ϕ11.5	10.9	M8
CSP-36AL	77	30	12	M36*1.5	58	6	44	4.7	ϕ14	ϕ13.5	10.3	M10
CSP-36BL	69	30	12	M36*1.5	58	6	44	4.7	ϕ14	ϕ13.5	10.3	M10
CSP-45AL	92	36	14	M45*1.5	71	7	54.8	4.6	ϕ16	ϕ15.5	13.4	M10
CSP-45BL	82	36	14	M45*1.5	71	7	54.8	4.6	ϕ16	ϕ15.5	13.4	M10

CSF-HYDRAULIC SUPPORT CLAMP CSF-ELEMENTO DE SOPORTE HIDRÁULICO

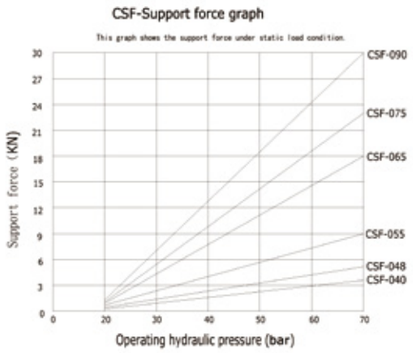

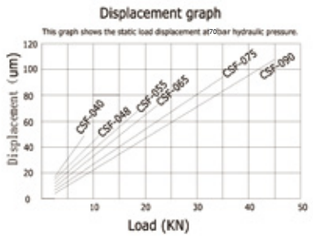

FEATURES

This series of products with compact structure, reasonable design, long service life, in 20-70 bar working conditions, can keep stable performance.
According to the different thickness of work piece, which can adjust the piston rod out spring strength.
Piston rod out of contact force is small,0.4-0.8 bar range, suitable for all kinds of work piece.
This product support power is large, can eliminate mechanical load and working vibration in the cutting process.

CARACTERÍSTICAS

La serie de productos con estructura compacta, diseño razonable, larga vida de servicio, en las condiciones de trabajo 20-70 bar, puede mantener un rendimiento estable.
De acuerdo al diferente grosor de la pieza de trabajo, que se puede ajustar a la biela del pistón de salida de la fuerza del resorte.
El pistón de salida de la fuerza del contacto es pequeña, el rango de 0.4-0.8bares, apto para todo tipo de piezas de trabajo.
La potencia de soporte del producto es grande, se puede eliminar la carga mecánica y la vibración de trabajo en el proceso de corte.

Max:operating pressure 70 bar
Min: operating pressure 20 bar
Double acting

Presión máx. de funcionamiento: 70 bares
Presión min. de funcionamiento: 20 bares
Doble efecto

ORDERING INDICATION MÉTODO DE ETIQUETADO DEL PEDIDO

CSF - 040 B L C

CSF	Series	CSF
040		040:40mm, 048:48mm, 055:55mm, 065:65mm, 075:75mm, 090:90mm
B	A: sprint extended piston B: Hydraulic extended piston	
L	L: Low pressure	
C	Piping method C: with G thread plug ,air venting function G: with R thread plug S: line type,with Rc thread port	

MODEL	CLAMPING FORCE AT 70 bar (KN)	CLAMPING FORCE AT 20 bar (KN)	STROKE(mm)	OIL CAPACITY(cm³)	PISTON AREA(cm²)
CSF-040AL	3.2	0.5	8	0.6	1.77
CSF-040BL	3.2	0.5	8	0.6	1.77
CSF-048AL	4.8	0.6	10	1.3	2.01
CSF-048BL	4.8	0.6	10	1.3	2.01
CSF-055AL	9	0.8	12	2	3.14
CSF-055BL	9	0.8	12	2	3.14
CSF-065AL	18	0.95	14	3.3	3.80
CSF-065BL	18	0.95	14	3.3	3.80
CSF-075AL	23	1.3	16	5.7	4.91
CSF-075BL	23	1.3	16	5.7	4.91
CSF-090AL	30	1.55	20	9.1	7.07
CSF-090BL	30	1.55	20	9.1	7.07

Unit:mm

MODEL	A	B	C	D	E	F	G	H	J	K	L	M	Nx	Ny	P	Q	R	S	T	U	V	W	X
CSF-040AL	75	54	45	40	56	31	25	31.5	22.5	34	68	11	26	5	3	9.5	5.5	14.5	19	15	6	13	M10*11
CSF-040BL	67	54	45	40	56	31	25	31.5	22.5	34	68	11	26	5	3	9.5	5.5	14.5	11	15	6	13	M10*11
CSF-048AL	85	61	51	48	64	39	25	35.5	25.5	40	73	11	30	0	3	9.5	5.5	13.5	21	16	6	13	M10*11
CSF-048BL	75	61	51	48	64	39	25	35.5	25.5	40	73	11	30	0	3	9.5	5.5	13.5	11	16	6	13	M10*11
CSF-055AL	97	69	60	55	70	45	25	39	30	47	80	11	33.5	0	3	11	6.8	11.5	27	20	8	17	M12*13
CSF-055BL	85	69	60	55	70	45	25	39	30	47	80	11	33.5	0	3	11	6.8	11.5	15	20	8	17	M12*13
CSF-065AL	115	81	70	65	85	56	29	46	35	55	94	11	39.5	0	5	11	6.8	14.5	30	22	9	19	M12*13
CSF-065BL	101	81	70	65	85	56	29	46	35	55	94	11	39.5	0	5	11	6.8	14.5	16	22	9	19	M12*13
CSF-075AL	142	92	80	75	107	72	35	52	40	63	106	13	45	0	5	14	9	17	35	25	9	22	M16*20
CSF-075BL	126	92	80	75	107	72	35	52	40	63	106	13	45	0	5	14	9	17	19	25	9	22	M16*20
CSF-090AL	169	107	95	90	128	88	40	59.5	47.5	75	126	13	52.5	0	5	17.5	11	18	41	30	10.5	24	M16*20
CSF-090BL	149	107	95	90	128	88	40	59.5	47.5	75	126	13	52.5	0	5	17.5	11	18	21	30	10.5	24	M16*20

CSF-AL

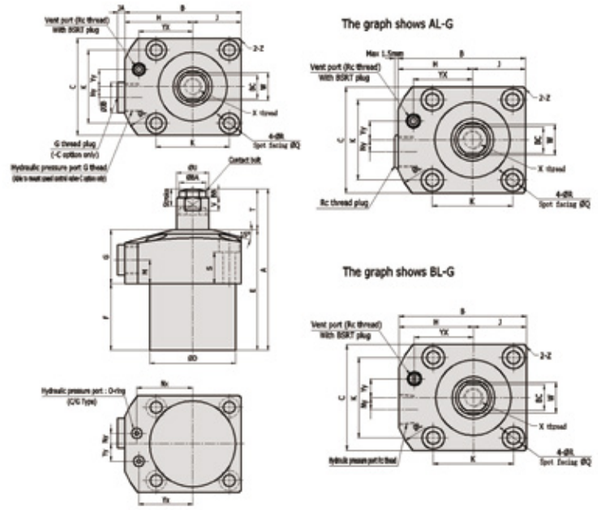

CSF-BL

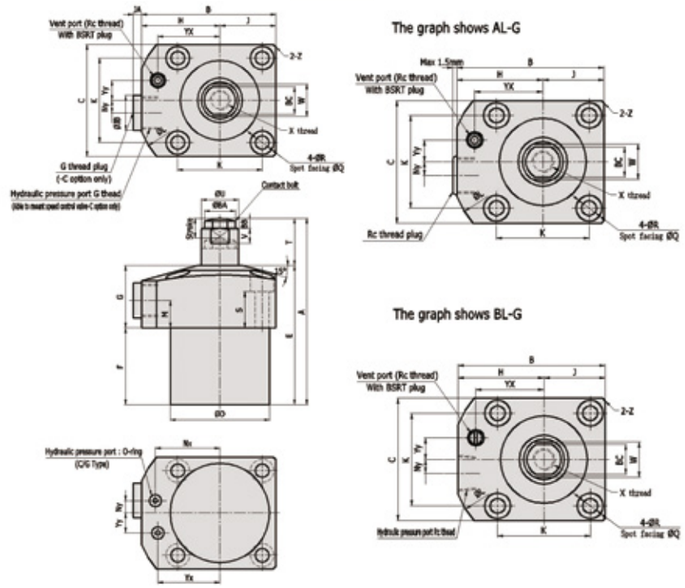

Unit:mm

MODEL	Yx	Yy	Z	BA	BB	BC	JA	ST	JB	HYDRAULIC PORT -C TYPE	HYDRAULIC PORT -S TYPE	O-RING (-C/-G TYPE)	VENT PORT BSPT (RC-THREAD)
CSF-040AL	25	8	C1	14.5	4	13	3	8	16	G1/8	G1/8	P5	PT1/8
CSF-040BL	25	8	C1	12.5	4	11	3	8	11	G1/4	G1/8	P5	PT1/8
CSF-048AL	28	11	C3	15.5	4	14	3	10	17	G1/4	G1/8	P5	PT1/8
CSF-048BL	28	11	C3	12.5	4	11	3	10	11	G1/4	G1/8	P5	PT1/8
CSF-055AL	31	13	R40	19	6	17	3	12	17	G1/4	G1/8	P5	PT1/8
CSF-055BL	31	13	R40	16.5	6	14	3	12	11	G1/4	G1/8	P5	PT1/8
CSF-065AL	37	14	R47	21	6	19	3	14	17	G1/4	G1/8	P7	PT1/8
CSF-065BL	37	14	R47	16.5	6	14	3	14	11	G1/4	G1/8	P7	PT1/8
CSF-075AL	42.5	15	R53	24	9	21	3	16	17	G1/4	G1/4	P7	PT1/8
CSF-075BL	42.5	15	R53	21.5	9	19	3	16	13	G1/4	G1/4	P7	PT1/8
CSF-090AL	50	15	R63	28	9	24	3	20	17	G1/4	G1/4	P7	PT1/8
CSF-090BL	50	15	R63	21.5	9	19	3	20	17	G1/4	G1/4	P7	PT1/8

HB-HYDRAULIC BOOSTER

HB-COMPENSADOR HIDRÁULICO DE TENSIÓN

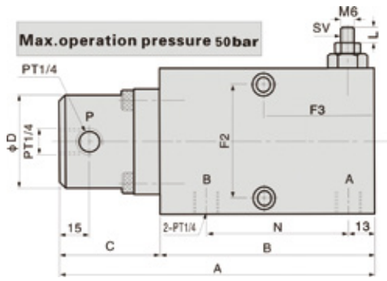

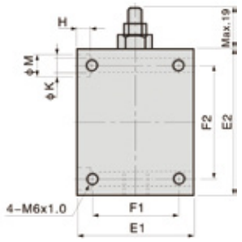

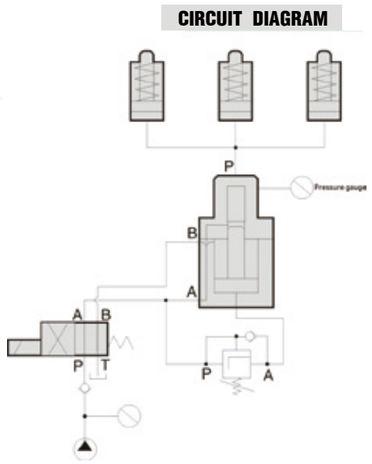

FEATURES

A hydraulic sequential valve is attached to this booster .when operating , it oils cylinder and makes it be at the dual pressure and let the sequential valve act , and then it will have multiple boosting pressure .
It's fit for hydraulic special purpose machine and MC clamp in low pressure circuit.
It needs a solenoid valve installed in the circuit, and then it will be able to operate HB .
Adjustment reference for csv sequence valve super-charger. The super-charger may be converted automatically low oil- pressure into high oil-pressure and obtain a high pressure clamping.

NOTE

Pressure set at 30 bar before delievery.

CARACTERÍSTICAS

Una válvula hidráulica de secuencia está unida a este refuerzo cuando esté funcionando, que los aceites de cilindros y la hace estar a la doble presión y dejar que el acto de la válvula secuencial, y entonces tendrá aumento de presión múltiple.
Es acto para máquina hidráulica de propósito especial y la grapa MC en el circuito de baja presión.
Se necesita una válvula de solenoide instalado en el circuito, entonces será capaz de operar ajuste de referencia HB para la válvula de secuencia sv super-cargador. El super cargador puede convertir automáticamente de baja presión de aceite en alta presión de aceite y obtener un fijación de alta presión.

NOTA

El presión tiene gue establecir en 30 bar antes de envio .

Max:operating pressure 50 bar
Min: operating pressure 20 bar

Presión máx. de funcionamiento: 50 bares
Presión min. de funcionamiento: 20 bares

Unit:mm

MODEL	MULTIPLE BOOST	HIGH PRESSURE OUT PUT	A	B	C	ΦD	E1	E2	F1	F2	F3	H	ΦK	ΦM	N
HB-9*6	9	6cc	157	107	50	Φ46	58	72	43	56	55	7	Φ7	Φ11	71
HB-8*22	8	22cc	210	139	71	Φ58	82	95	62	80	70	9	Φ9	Φ14	96
HB-5*35	5	35cc	210	139	71	Φ58	82	95	62	80	70	9	Φ9	Φ14	96
HB-3.8*45	3.8	45cc	210	139	71	Φ58	82	95	62	80	70	9	Φ9	Φ14	96

CSV-HYDRAULIC SEQUENCE VALVE CSV-VÁLVULA HIDRÁULICA DE SECUENCIA

CSV-A

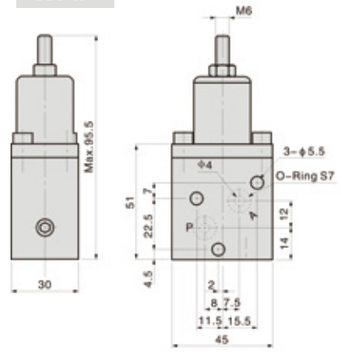

CSV-B

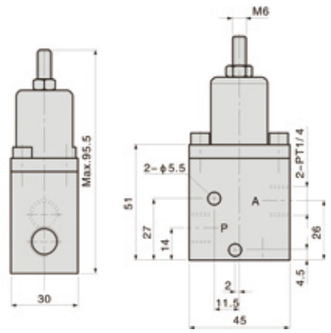

CLSV-A Manifold	Range of pressure
CLSV-B Line type	25-70 bar

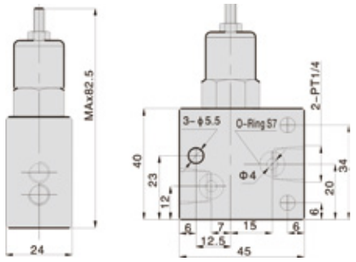

CIRCUIT DIAGRAM

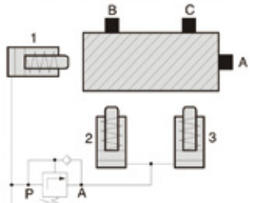

40bar

The hydraulic clamp 1 pushes work piece to A. The pressure reaches to the setting value 40 bar on csv.
The hydraulic clamps 2 and 3 push work piece to B and C to provide sequential clamping motion.

FEATURES

This series of hydraulic sequence valve is especially ideal for your fitting on the circuit of fixture.
The hydraulic cylinder motion sequences are decided by the pressure .The sequence value features Type and Pressure Range compact construction and high pressure resistance .It requires no further control when fitting on the circle, and provides a positive sequential motion control.
This series provides two types mounting type for choice. A type is a manifold mounting type and B type is a line mounting type. You get a flexible choice of mounting types to suit your fixture design.

CARACTERÍSTICAS

Esta serie de válvula hidráulica de secuencia es especialmente ideal para su instalación en el circuito de sujeción. Las secuencias de movimiento del cilindro hidráulico se deciden por la presión. Las características de valor de secuencia, tipo, rango de presión, diseño compacto y alta resistencia a la presión. No requiere ningún control adicional cuando ajuste el círculo, y proporciona un control de movimiento secuencial positivo.
Esta serie ofrece dos tipos de tipo de opción de montaje. Tipo A es un montaje del colector y tipo B es un tipo de montaje de línea. Usted obtiene un sistema flexible de los tipos de montaje para adaptarse a su diseño del aparato.

Max:operating pressure 250 bar
Min: operating pressure 25 bar

Presión máx. de funcionamiento: 250 bares
Presión min. de funcionamiento: 25 bares

NOTE

You should set the pressure difference not be less than 10 bar when multiple sequence valves used in parallel circuit .Setting the pressure difference and working pressure must be exceed 10 bar.

NOTA

Establecer la diferencia de presión no será menor que 10 bar cuando múltiples válvulas de secuencia utilizados en circuito paralelo.Ajuste de la diferencia de presión y presión de trabajo debe ser exceda 10 bar.

ORDERING INDICATION MÉTODO DE ETIQUETADO DEL PEDIDO

Model	Type	Pressure range
CSV-A	Manifold type	25-250 bar
CLSV-A		25-70 bar
CSV-B	Line type	25-250bar
CLSV-B		25-70 bar

CPRV-HYDRAULIC PRESSURE REDUCING VALVE CPRV-VÁLVULA HIDRÁULICA DE REDUCCIÓN DEL PRESIÓN

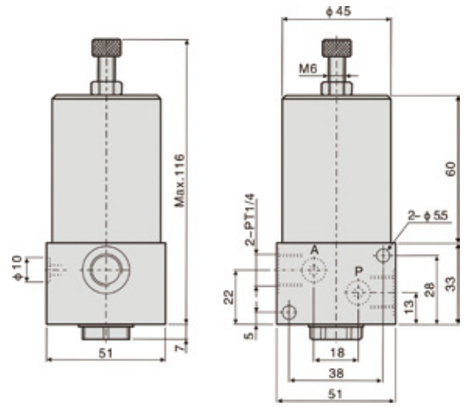

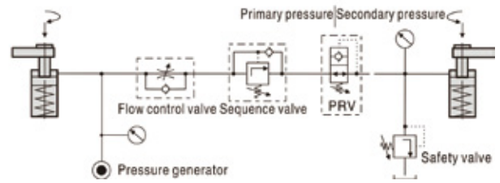

Max. operating pressure: 500 bar

ORDERING INDICATION MÉTODO DE ETIQUETADO DEL PEDIDO

CPRV – M 02 1

CPRV	Series	CPRV
M	Piping method	Blank :Line type M:Manifold
02	Model	02
1	Pressure range (bar)	❶ 5-30 ❷ 210-50 ❸ 20-120 ❹ 30-240 ❺ 50-380

CFCV-HYDRAULIC FLOW CONTROL VALVE CFCV-VÁLVULA HIDRÁULICA DE FLUJO

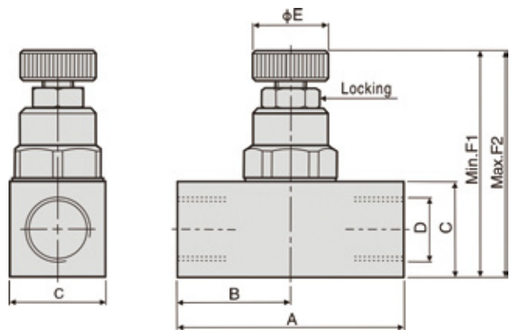

Max. operating pressure: 210 bar

Unit:mm

MODEL	A	B	C	D	Φ E	F1	F2
CFCV-01	35	19	□15.9	PT1/8	ϕ12	41	44.5
CFCV-02	45	22.5	□ 19	PT1/4	ϕ15	45	48.5

PTA SWIVEL CLAMPING SCREW

PTA TORNILLO DE PRESIÓN CON BOLA Y ACANALADO

PTB SWIVEL (SHOULDER) CLAMPING SCREW

PTB TORNILLO DE PRESIÓN CON BOLA Y HOMBRO

PTC GRIPPER SCREW

PTC TORNILLO DE PRESIÓN CON DIENTE

PTD GRIPPER NUT

PTD TORNILLO DE TUERCA

TYPE: SMOOTH BALL END BOLT & SERRATED BALL END BOLT

MATERIAL-BODY:S45C STEEL BALL:SUJ2
HARDNESS-BODY:HRC35° STEEL BALL:HRC62°

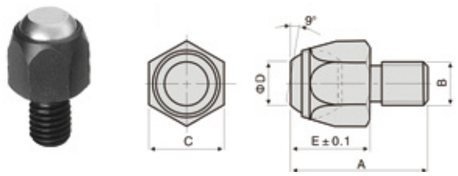

PTA1

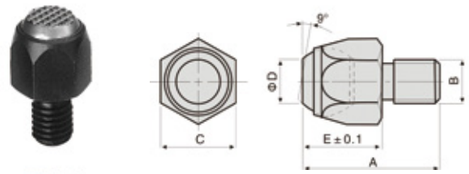

PTA2

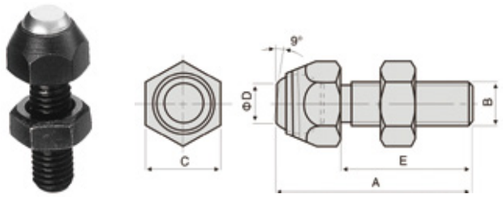

PTA3

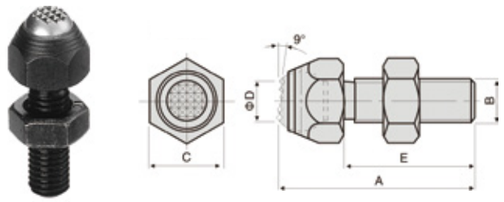

PTA4

MODEL	PTA1-0006 PTA2-0006	PTA1-0108 PTA2-0108	PTA1-0210 PTA2-0210	PTA1-0312 PTA2-0312	PTA1-0416 PTA2-0416	PTA1-0520 PTA2-0520	PTA1-0624 PTA2-0624	PTA1-0730 PTA2-0730
A	21	25	30	35	42	55	65	80
B	M6*1.0	M8*1.25	M10*1.5	M12*1.75	M16*2.0	M20*2.5	M24*2.0	M30*2.0
C	10	14	17	22	27	36	36	46
D	6	8	10	12	14	14	18	21
E	10	12	16	22	26	27	32	35
g	12	15	25	70	140	280	560	880

MODEL	PTA3-0108 PTA4-0108	PTA3-0210 PTA4-0210	PTA3-0312 PTA4-0312	PTA3-0416 PTA4-0416	PTA3-0520 PTA4-0520	PTA3-0624 PTA4-0624	PTA3-0730 PTA4-0730
A	36	45	50	60	87	98	110
B	M8*1.25	M10*1.5	M12*1.75	M16*2.0	M20*2.5	M24*2.0	M30*2.0
C	14	17	17	24	36	36	46
D	7	8	10	12	14	18	21
E	25	30	35	40	60	66	75
g	25	55	55	140	330	595	1030

TYPE: ROUND END & FLAT END & SERRATED END

MATERIAL-BODY:SCM21 STEEL BALL:SUJ2
HARDNESS-BODY:HRC32° ~ 38° STEEL BALL:HRC62°

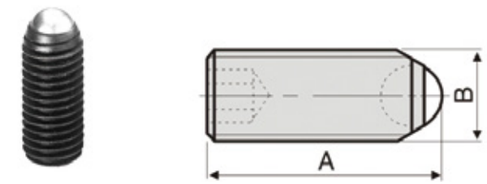

PTB1

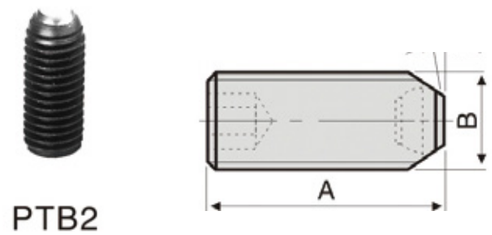

PTB2

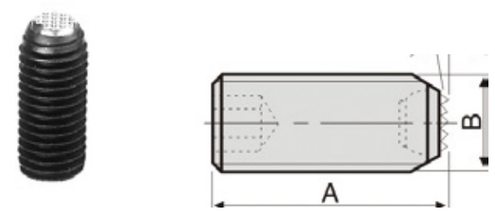

PTB3

Unit:mm

MODEL	PTB1-0206	PTB1-0306	PTB1-0408	PTB1-0508	PTB1-0608	PTB1-0710	PTB1-0810	PTB1-0910	PTB1-1012	PTB1-1112	PTB1-1212	PTB1-1312
A	13.5	23.5	12	20	30	17	27	37	23.2	31.2	41.2	51.2
B	M6*1.0	M6*1.0	M8*1.25	M8*1.25	M8*1.25	M10*1.5	M10*1.5	M10*1.5	M12*1.75	M12*1.75	M12*1.75	M12*1.75
C	3	3	4	4	4	5	5	5	6	6	6	6
g	2.4	3.8	3.2	5.8	9	6.7	11.2	16.2	12.5	20	30	40

MODEL	PTB1-1416	PTB1-1516	PTB1-1616	PTB1-1716	PTB1-1816	PTB2-2006 PTB3-3806	PTB2-2106 PTB3-3906	PTB2-2208 PTB3-4008	PTB2-2308 PTB3-4108	PTB2-2408 PTB3-4208	PTB2-2510 PTB3-3811	PTB2-2610 PTB3-4410
A	25.6	35.6	45.6	55.6	65.6	13	23	11.2	19.2	29.2	15	25
B	M16*2.0	M16*2.0	M16*2.0	M16*2.0	M16*2.0	M6*1.0	M6*1.0	M8*1.25	M8*1.25	M8*1.25	M10*1.5	M10*1.5
C	8	8	8	8	8	3	3	4	4	4	5	5
g	28	40	45	55	65	2.4	3.8	3.2	5.8	9	5.7	11.2

MODEL	PTB2-2710 PTB3-4510	PTB2-2812 PTB3-4612	PTB2-2912 PTB3-4712	PTB2-3012 PTB3-4812	PTB2-3112 PTB3-4912	PTB2-3216 PTB3-5016	PTB2-3316 PTB3-5116	PTB2-3416 PTB3-5216	PTB2-3516 PTB3-5316	PTB2-3616 PTB3-5416
A	35	22	30	40	50	24	34	44	54	64
B	M10*1.5	M12*1.75	M12*1.75	M12*1.75	M12*1.75	M16*2.0	M16*2.0	M16*2.0	M16*2.0	M16*2.0
C	5	6	6	6	6	8	8	8	8	8
g	16.2	12.5	20	30	40	28	40	45	55	65

PTB5

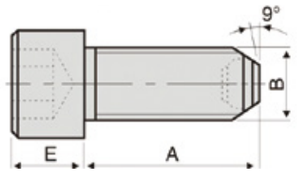

PTB6

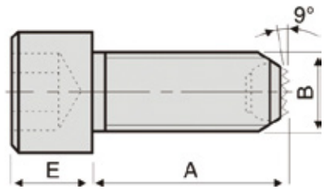

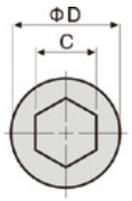

PTB4

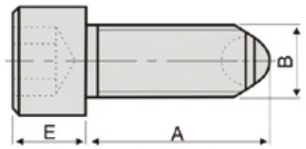

Unit:mm

MODEL	PTB4-0106	PTB4-0206	PTB4-0306	PTB4-0408	PTB4-0508	PTB4-0608	PTB4-0710	PTB4-0810	PTB4-0910	PTB4-1012	PTB4-1112	PTB4-1212	PTB4-1312	PTB4-1416
A	14.5	23.5	33.5	18.7	28.7	38.7	25	40	60	31.2	46.2	66.2	81.2	40.6
B	M6	M6	M6	M8	M8	M8	M10	M10	M10	M12	M12	M12	M12	M16
C	5	5	5	6	6	6	8	8	8	10	10	10	10	14
D	10	10	1	13	13	13	16	16	16	18	18	18	18	24
E	6	6	6	8	8	8	10	10	10	12	12	12	12	16
g	5.3	7.4	9.5	13.5	20	24	26	34	46	40	50	70	83	90

MODEL	PTB4-1516	PTB4-1616	PTB4-1716	PTB5-1806 PTB6-3506	PTB5-1906 PTB6-3606	PTB5-2006 PTB6-3706	PTB5-2108 PTB6-3808	PTB5-2208 PTB6-3908	PTB5-2308 PTB6-4008	PTB5-2410 PTB6-4110	PTB5-2510 PTB6-4210	PTB5-2610 PTB6-4310
A	50.6	65.6	90.6	14	23	33	18	28	38	24	39	59
B	M16	M16	M16	M6	M6	M6	M8	M8	M8	M10	M10	M10
C	14	14	14	5	5	5	6	6	6	8	8	8
D	24	24	24	10	10	10	13	13	13	16	16	16
E	16	16	16	6	6	6	8	8	8	10	10	10
g	110	130	170	5.3	7.4	9.5	13.5	20	24	26	34	46

MODEL	PTB5-2712 PTB6-4412	PTB5-2812 PTB6-4512	PTB5-2912 PTB6-4612	PTB5-3012 PTB6-4712	PTB5-3116 PTB6-4816	PTB5-3216 PTB6-4916	PTB5-3316 PTB6-5016	PTB5-3416 PTB6-5116
A	30	45	65	80	39	49	64	89
B	M12	M12	M12	M12	M16	M16	M16	M16
C	10	10	10	10	14	14	14	14
D	18	18	18	18	24	24	24	24
E	12	12	12	12	16	16	16	16
g	40	50	70	83	90	110	13	170

MATERIAL-BODY:S45C STEEL BALL:SKH9
HARDNESS-BODY:HRC35° STEEL BALL:HRC60°

PTC1

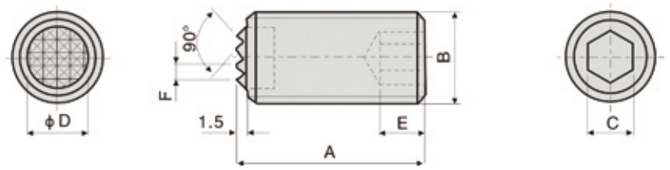

PTC2

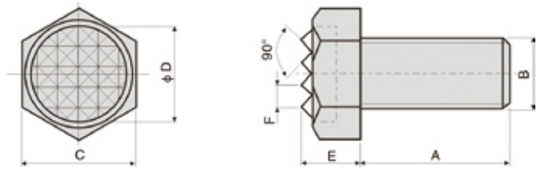

Unit:mm

MODEL	PTC1-0110	PTC1-0210	PTC1-0312	PTC1-0412	PTC1-0516	PTC1-0616	PTC1-0720	PTC1-0820
A	25	50	25	50	25	50	25	50
B	M10*1.5	M10*1.5	M12*1.75	M12*1.75	M16*2.0	M16*2.0	M20*2.5	M20*2.5
C	5	5	6	6	8	8	10	10
D	6.5	6.5	8	8	11.5	11.5	13	13
E	4	5	5	5	6	6	8	8
R	2.3	2.3	2.3	2.3	3	3	3	3
g	15	30	22	45	37	78	58	120

MODEL	PTC2-0106	PTC2-0208	PTC2-0310	PTC2-0410	PTC2-0512	PTC2-0612	PTC2-0716	PTC2-0816	PTC2-0920	PTC2-1020
A	25	25	25	40	25	40	35	50	40	60
B	M6*1.0	M8*1.25	M10*1.5	M10*1.5	M12*1.75	M12*1.75	M16*2.0	M16*2.0	M20*2.5	M20*2.5
C	10	13	17	17	19	19	24	24	30	30
D	7.9	9.5	12.7	12.7	15.9	15.9	19.1	19.1	25.4	25.4
E	6	7.3	8.4	8.4	9.5	9.5	12	12	14.5	14.5
F	2.3	3	3	3	3	3	3	3	3	3
g	8	15	30	35	35	50	85	100	160	205

TYPE: GRIPPER PAD(SQUARE) & GRIPPER PAD(ROUND) & SERRATED END & FLAT END & ROUND END

MATERIAL FOR PTD1/PTD2/PTD3: BODY:SKH9
HARDNESS-HRC60°

MATERIAL FOR PTD4/PTD5: BODY:SCM440
HARDNESS-HRC60°

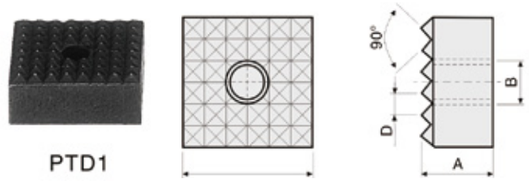

PTD1

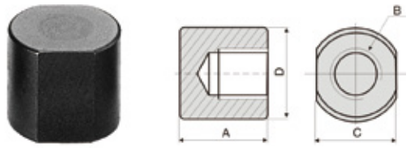

PTD4

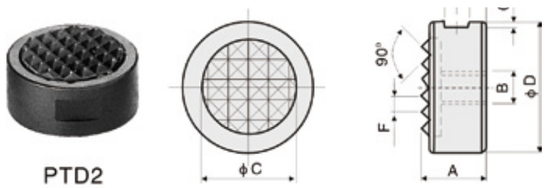

PTD2

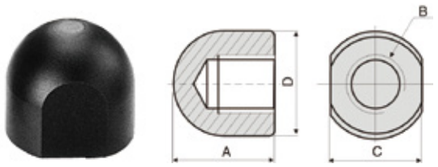

PTD5

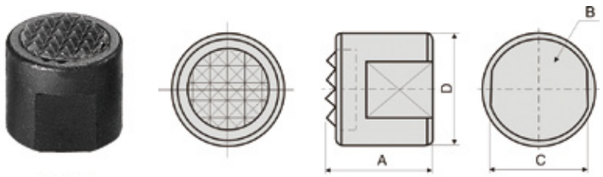

PTD3

Unit:mm

MODEL	PTD1-0110	PTD1-0212	PTD1-0320	PTD1-0425	PTD3-0112	PTD3-0216	PTD4-0112	PTD4-0216	PTD5-0112	PTD5-0216
A	10	10	10	10	20	25	20	25	20	25
B	M5*0.8	M6*1.0	M6*1.0	M6*1.0	M12*1.75	M16*2.0	M12*1.75	M16*2.0	M12*1.75	M16*2.0
C	10	12	20	25	19	24	19	24	19	24
D	2.3	3	3	3	22	28	22	28	22	28
g	8	10	30	43	43	80	43	76	42	63

MODEL	PTD2-0110	PTD2-0212	PTD2-0316	PTD2-0420	PTD2-0525
A	10	12	12	12	12
B	M5*0.8	M6*1.0	M6*1.0	M6*1.0	M6*1.0
C	8.1	9.6	13	16.3	19.5
D	10	12	16	20	25
E	3.4	4	4	4	4
F	2.3	3	3	3	3
g	5	8	16	25	40

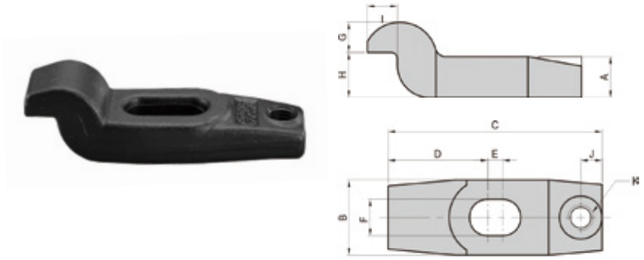

THREADED GOOSE NECK CLAMP

MATERIAL: STEEL 45
HEAT TREATMENT: HRC 32°～38
SURFACE: BLACK OXIDATING.

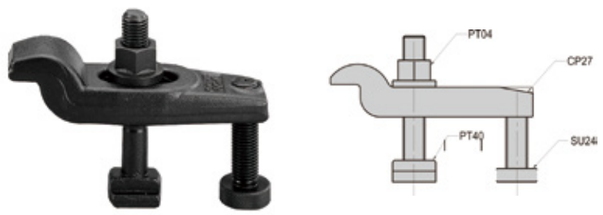

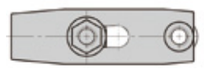

CP28 GOOSE NECK CLAMP

MATERIAL: STEEL 45
HEAT TREATMENT: HRC 32°～38
SURFACE: BLACK OXIDATING.

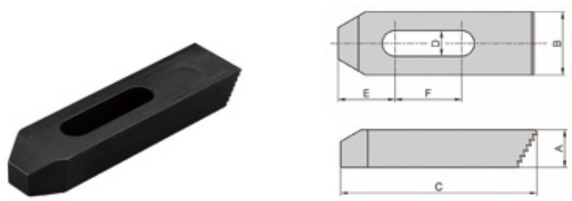

CP25 STEP CLAMP

MATERIAL: STEEL 45
HEAT TREATMENT: HRC 32°～38
SURFACE: BLACK OXIDATING.
APPLICATION: USED WITH SU25° TOGETHER

Unit:mm

MODEL	A	B	C	D	E	F	G	H	I	J	K	Kg
CP27-16100	19	35	100	46.5	7	17	14	21	14	10	M12*1.75	0.78
CP27-16150	22	45	150	62	26	17	15	24	22	12	M16*2.0	1.7

MODEL	CP27	PT40	PT04	SU24	Kg
CP28-ZC-40	16100	16100	1624	12060	1.5
CP-28-ZC-60	16150	16100	1624	16070	2.6

MODEL	A	B	C	D	E	F	Kg
CP25-10063	13	25	63	11	18	19	0.100
CP25-10100	16	25	100	11	27	37	0.215
CP25-10150	19	32	150	11	30	50	0.570
CP25-12063	13	25	63	13	20	14	0.100
CP25-12100	19	32	100	13	29	34	0.320
CP25-12150	22	32	150	13	32	50	0.650
CP25-14063	13	25	63	15	20	14	0.100
CP25-14100	19	32	100	15	29	34	0.315
CP25-14150	22	32	150	15	32	50	0.600
CP25-16063	16	32	63	17	22	12	0.160
CP25-16100	19	38	100	17	31	26	0.400
CP25-16150	22	38	150	17	40	47	0.710
CP25-18063	16	32	63	20	22	12	0.140
CP25-18100	19	38	100	20	31	26	0.380
CP25-18150	22	38	150	20	40	47	0.750
CP25-20100	19	38	100	21	31	26	0.360
CP25-20150	25	38	150	21	43	44	0.750
CP25-20200	25	50	200	21	55	65	1.500
CP25-24150	32	50	150	26	43	38	1.290
CP25-24200	32	50	200	26	53	57	2.000
CP25-24250	38	50	250	26	60	64	2.950

NHS&NHTS

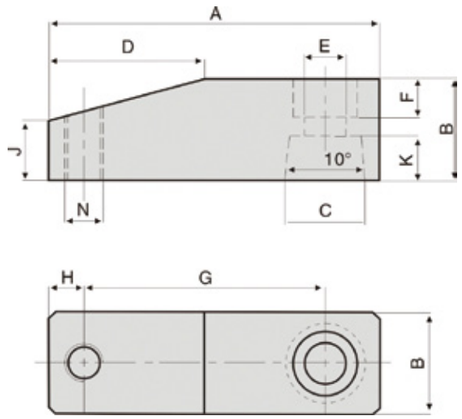

NHSD&NHTSD

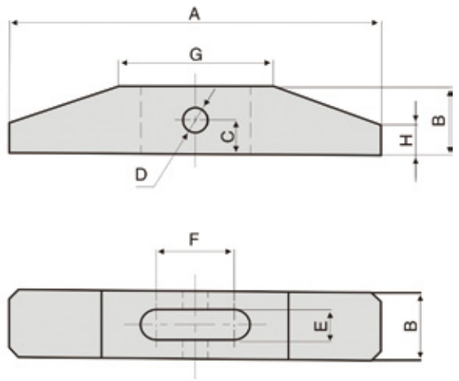

NHS&NHTS HYDRAULIC SWING CLAMP ARM DIMENSION

Unit:mm

MODEL	A	B	C	D	E	F	G	H	J	K	N
NHS-25	74	25*25	ϕ18	37	11	9	50	10	17	12	M10
NHTS-25	74	25*25	ϕ18	37	11	9	50	10	17	12	M10
NHS-32	80	25*25	ϕ20	47.5	11	9	55	10	17	12	M10
NHTS-32	80	25*25	ϕ20	47.5	11	9	55	10	17	12	M10
NHS-40	80	25*25	ϕ20	47.5	11	9	55	10	17	12	M10
NHTS-40	80	25*25	ϕ20	47.5	11	9	55	10	17	12	M10
NHS-50	80	30*30	ϕ25	47.5	11	9	55	10	17	12	M10
NHTS-50	80	30*30	ϕ25	47.5	11	9	55	10	17	12	M10
NHS-63	103	32*32	ϕ25	48.5	13	12	75	11	19	14	M12
NHSD-25	100	19*19	9.5	ϕ 8	9	21	40	9.8			
NHTSD-25	100	19*19	9.5	ϕ 8	9	21	40	9.8			
NHSD-32	120	22*22	9.5	ϕ 8	10	25	50	9.8			
NHTSD-32	120	22*22	11	ϕ 8	10	25	50	9.8			
NHSD-40	120	22*22	11	ϕ 8	10	25	50	9.8			
NHTSD-40	120	22*22	11	ϕ 8	10	25	50	9.8			
NHSD-50	120	22*22	11	ϕ 8	10	25	50	9.8			
NHTSD-50	120	22*22	11	ϕ 8	10	25	50	9.8			
NHSD-63	140	25*25	12.5	ϕ 10	12	30	60	9.8			

CAS

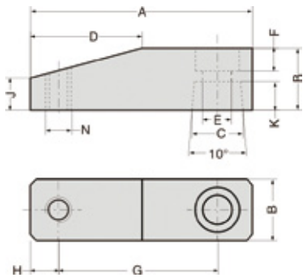

CAS-D

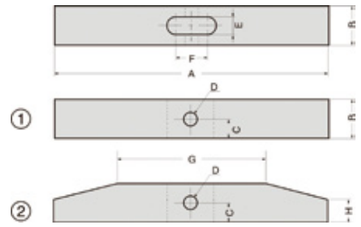

CHS

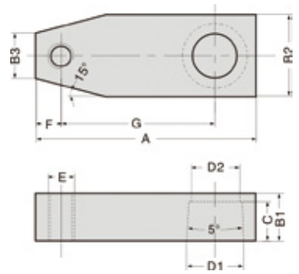

CHS-D

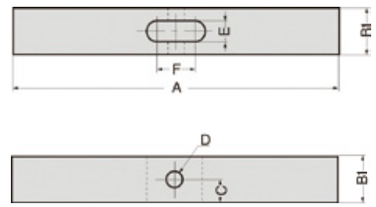

CAS PNEUMATIC SWING CLAMP ARM DIMENSION

Unit:mm

MODEL	A	B	C	D	E	F	G	H	J	K	N
CAS-25	48	16	ϕ14	28	ϕ7	6	30	8	8	6	M6
CAS-25D	100	19	9.5	ϕ6	9	21	40	9.8	-	-	-
CAS-32	70	19	ϕ16	35	ϕ9	7	50	9	9.8	9	M8
CAS-32D	100	19	9.5	ϕ8	9	21	40	9.8	-	-	-
CAS-40	70	19	ϕ16	35	ϕ9	7	50	9	9.8	9	M8
CAS-40D	100	19	9.5	ϕ8	9	21	40	9.8	-	-	-
CAS-50	95	25	ϕ20	47.5	ϕ11	9	70	10	17	12	M10
CAS-50D	120	22	11	ϕ8	10	25	50	9.8	-	-	-
CAS-63	95	25	ϕ20	47.5	ϕ11	9	70	10	17	12	M10
CAS-63D	120	22	11	ϕ8	10	25	50	9.8	-	-	-

CHS HYDRAULIC SWING CLAMP ARM DIMENSION

Unit:mm

MODEL	A			B1	B2	B3	C	D	D1	D2	E	F	G
	STANDARD WITH THREAD	STANDARD WITHOUT THREAD	EXTENSION										
CHS-25	74	74	100	16	27	15	13	-	ϕ18	ϕ15	M10*1.5	10	50
CHS-32	81	81	110	18	31	17	14	-	ϕ20	ϕ17	M10*1.5	10	55
CHS-40	86	86	120	18	31	17	15	-	ϕ22.4	ϕ19	M10*1.5	10	60
CHS-50	96	96	130	20	37	19	16	-	ϕ28	ϕ21	M12*1.75	12	65
CHS-63	114	114	150	23	48	24	18	-	ϕ35.5	ϕ25	M16*2.0	15	75
CHS-25D	-	140	200	□19	-	-	9.5	ϕ8	-	-	9	16	-
CHS-32D	-	160	230	□22	-	-	11	ϕ8	-	-	10	19	-
CHS-40D	-	160	230	□22	-	-	11	ϕ10	-	-	10	21	-
CHS-50D	-	180	260	□25	-	-	12.5	ϕ12	-	-	12	26	-
CHS-63D	-	200	-	□32	-	-	16	ϕ15	-	-	15	33	-

CH-NC

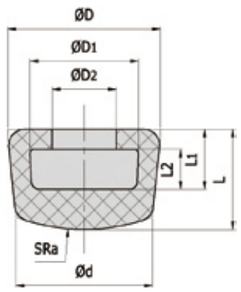

CH-FW

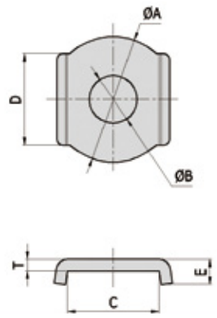

CH-BR

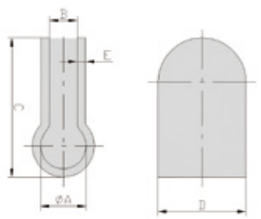

CH-SF

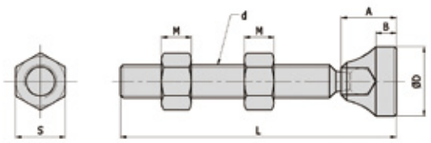

Unit:mm

MODEL	L	L1	L2	ΦD	ΦD1	ΦD2	Φd	SRA
CH-NC-140	11	6	3.7	16	10.5	6.4	14	SR20
CH-NC-516	12.5	7.5	5	19	13.5	8	17	SR24
CH-NC-380	14	8.5	6	22	16	10	20.8	SR25
CH-NC-120	16	10.5	8	30	21.5	13	26	-

MODEL	ΦA	ΦB	C	D	E	T
CH-FW-080	12	4.4	8.4	8.2	3.1	1
CH-FW-100	12.6	4.9	9.4	8.4	2.6	1
CH-FW-140	14.2	6.3	11.5	7	3.9	1.5
CH-FW-141	16.6	6.8	12.6	10.8	3.4	1.5
CH-FW-516	21.6	8.2	15.7	15.7	4.5	2
CH-FW-120	31	13	24.7	22.9	6.5	3
CH-FW-580	36	16	27	23.6	7	3

MODEL	ΦA	B	C	D	E
CH-BR-140	8.3	6	32.5	12.7	3
CH-BR-141	6.5	6	22.3	9.5	3
CH-BR-142	6.5	4	25.4	12.7	2
CH-BR-516	8.3	6	32.5	15.9	2.5
CH-BR-380	10.5	8	42.5	20	3
CH-BR-120	13	10	43	23	3
CH-BR-580	16.5	10	50	31.8	3

MODEL	L	M	A	B	ΦD	d	S
CH-SF-05035	35	4.7	10	4	12	M5*P0.8	8
CH-SF-06050	50	5.2	10	4	12	M6*P1.0	10
CH-SF-08065	65	6.8	13	5.5	20	M8*P1.25	13
CH-SF-10085	85	8.4	15	5.5	20	M10*P1.5	16
CH-SF-38300	78	6.8	11	4.5	16	3/8"-16	13

COMPARISON TABLE OF TOGGLE CLAMPS

CLAMPTEK	DESTACO	KAKUTA	CARRLANE	AMF
CH-12143	207-TL	HV 352-TL	-	-
CH-12142	207-L	HV 353-L	CL-353-VTC	-
CH-13008	309-U	HV 400	-	-
CH-12130	207-U	HV 450	CL-450-VTC	90035
CH-12130-SS	207-USS	HV 450-2S	CL-450-VTC-S	-
CH-12135	207-UB	HV 451-B	CL-451-VTC	90233
CH-12137	207-ULB	HV 451-BL	-	-
CH-12136	207-TUB	HV 451-BT	-	-
CH-12138	207-TULB	HV 451-BTL	-	-
CH-12131	207-TU	HV 452-T	CL-452-VTC	
CH-12133	207-TUL	HV 452-TL	-	-
CH-12132	207-UL	HV 453-L	CL-453-VTC	-
CH-12275	210-S	HV 550	CL-550-VTC	90449
CH-12280	210-SB	HV 551-B	CL-551-VTC	90563
CH-12300	210-TSB	HV 551-BT	-	-
CH-12295	210-TS	HV 552-T	CL-552-VTC	-
CH-12265	210-U	HV 650	CL-650-VTC	90043
CH-12270	210-UB	HV 651-B	CL-651-VTC	90241
CH-12290	210-TUB	HV 651-BT	-	-
CH-12285	210-TU	HV 652-T	CL-652-VTC	-
CH-10249	247-S	HV 750	CL-750-VTC	90456
CH-10250	247-SB	HV 751-B	CL-751-VTC	-
CH-10247	247-U	HV 850	CL-850-VTC	90050
CH-10248	247-UB	HV 851-B	CL-851-VTC	-
CH-101-JS	267-S	HV 950	CL-950-VTC	90464
CH-101-J	267-U	HV 1050	CL-1050-VTC	90068
CH-101-A	201-U	HV 150	CL-150-VTC	90019
CH-101-ASS	201-USS	HV 150-2S	CL-151-VTC-S	95026
CH-101-AI	201-UB	HV 151-B	CL-151-VTC	90217
CH-101-AIT	201-TUB	HV 151-BT	-	-
CH-101-AT	201-TU	HV 152-T	CL-152-VTC	-
CH-13005	305-U	HV 200	CL-200-VTC	-
CH-13005-SS	305-USS	HV 200-2S	CL-200-VTC-S	-
CH-12050	202	HV 250	CL-250-VTC	90514
CH-12050-SS	202-SS	HV 250-2S	CL-250-VTC-S	-
CH-12050-U	202-U	HV 250-U	-	90027
CH-12055	202-B	HV 251-B	CL-251-VTC	-
CH-12075	202-TB	HV 251-BT	-	-
CH-12070	202-T	HV 252-T	CL-252-VTC	-
CH-13007	307-U	HV 300	-	-
CH-12140	207-S	HV 350	CL-350-VTC	90431
CH-12145	207-SB	HV 351-B	CL-351-VTC	90555
CH-12147	207-LB	HV 351-BL	-	-
CH-12146	207-TSB	HV 351-BT	-	-
CH-12148	207-TLB	HV 351-BTL	-	-
CH-12141	207-TS	HV 352-T	CL-352-VTC	-
CH-201-A	205-S	HH 150	CL-150-HTC	-
CH-201-ASS	205-SSS	HH 150-2S	CL-150-HTC-S	-
CH-201-AI	205-SB	HH 151-B	CL-151-HTC	-
CH-201-AL	205-SL	HH 154-LE	CL-153-HTC	-
CH-201-AR	205-SR	HH 155-R	CL-152-HTC	-

HYDRAULIC POWER UNITS

YINSH LOCK NUTS

PRECISION FIXTURING SYSTEM

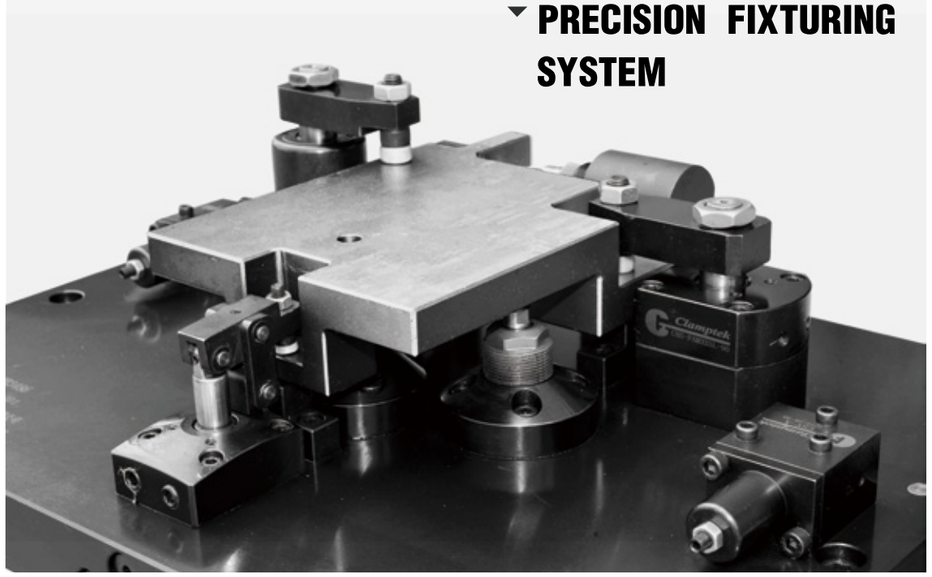

TPI BEARING

CH-FC

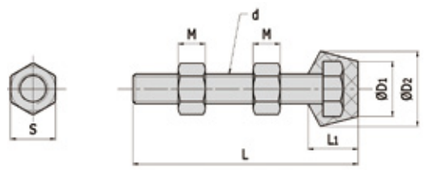

CH-SA

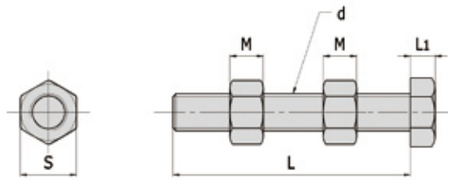

Unit:mm

MODEL	L	L1	M	d	ΦD1	ΦD2	S
CH-FC-108515	85	24.5	8.4	M10*P1.5	15	23	16
CH-FC-38312	3-1/2"(89)	24.5	5.3	3/8'-16	15	23	14
CH-FC-38412	4-1/2"(114)	24.5	5.3	3/8'-16	15	23	14
CH-FC-38334	3-3/4"(95)	24.5	5.3	3/8'-16	15	23	14
CH-FC-086312	63	19	6.8	M8*P1.25	13	18.5	13
CH-FC-087512	75	19	6.8	M8*P1.25	13	18.5	13
CH-FC-56212	2-1/2"(63)	19	5	5/16"-18	13	18.5	12.8
CH-FC-56300	3	19	5	5/16"-18	13	18.5	12.8
CH-FC-064410	44	14	5.2	M6*P1.0	10	15	10
CH-FC-065110	51	14	5.2	M6*P1.0	10	15	10
CH-FC-14134	1-3/4"(45)	14	3.8	1/4"-20	10	15	10.8
CH-FC-14218	2-1/8"(54)	14	3.8	1/4"-20	10	15	10.8
CH-FC-042507	25	11.5	3.2	M4*P0.7	10.5	13.5	7
CH-FC-044207	42	11.5	3.2	M4*P0.7	10.5	13.5	7
CH-FC-10138	1-3/8"(35)	11.5	3.1	3/16"-24	10.5	13.5	7.8

MODEL	L	L1	M	d	S
CH-SA-041507	15	2.8	3.2	M4*P0.7	7
CH-SA-042007	20	2.8	3.2	M4*P0.7	7
CH-SA-042507	25	2.8	3.2	M4*P0.7	7
CH-SA-044007	40	2.8	3.2	M4*P0.7	7
CH-SA-051508	15	3.5	4.7	M5*P0.8	8
CH-SA-053008	30	3.5	4.7	M5*P0.8	8
CH-SA-064010	40	4	5.2	M6*P1.0	10
CH-SA-065010	50	4	5.2	M6*P1.0	10
CH-SA-083012	30	5.3	6.8	M8*P1.25	13
CH-SA-085012	50	5.3	6.8	M8*P1.25	13
CH-SA-086512	65	5.3	6.8	M8*P1.25	13
CH-SA-105015	50	6.4	8.4	M10*P1.5	16
CH-SA-107515	75	6.4	8.4	M10*P1.5	16
CH-SA-109015	90	6.4	8.4	M10*P1.5	16
CH-SA-125017	50	7.5	10.8	M12*P1.75	18
CH-SA-08034	3/4"(19)	3	3	5/32"-32	7
CH-SA-10118	1-1/8"(28)	3.1	4	3/16"-24	7.8
CH-SA-14112	1-1/2"(38)	3.8	5.8	1/4"-20	10.8
CH-SA-14134	1-3/4"(45)	3.8	5.8	1/4"-20	10.8
CH-SA-56200	2"(50)	5	6.7	5/16"-18	12.8
CH-SA-56212	2-1/2"(63)	5	6.7	5/16"-18	12.8
CH-SA-38300	3"(76)	5.3	7.8	3/8"-16	14
CH-SA-38400	4"(100)	5.3	7.8	3/8"-16	14
CH-SA-12300	3"(76)	7.3	9.5	1/2"-12	18.7
CH-SA-12412	4-1/2"(114)	7.3	9.5	1/2"-12	18.7
CH-SA-58500	5"(127)	10	11.5	5/8"-11	24

TABLA COMPARATIVA DE GRAPAS RÁPIDAS

CLAMPTEK	DESTACO	KAKUTA	CARRLANE	AMF
CH-201	205-U	HH 250	CL-250-HTC	93005
CH-201-SS	205-USS	HH 250-2S	CL-250-HTC-S	-
CH-201-I	205-UB	HH 251-B	CL-251-HTC	93203
CH-201-L	205-UL	HH 254-LE	CL-253-HTC	-
CH-201-R	205-UR	HH 255-R	CL-252-HTC	-
CH-201-B	215-U	HH 350	CL-350-HTC	-
CH-201-BSS	215-USS	HH 350-2S	CL-350-HTC-S	-
CH-201-BS	215-S	HH 350-S	CL-300-HTC	-
CH-201-BI	215-UB	HH 351-B	CL-351-HTC	-
CH-201-BSI	215-SB	HH 351-SB	-	-
CH-225-D	225-U	HH 450	CL-450-HTC	-
CH-225-DSS	225-USS	HH 450-2S	CL-450-HTC-S	-
CH-225-DI	225-UB	HH 451-B	CL-451-HTC	90233
CH-20235	235-U	HH 550	CL-550-HTC	90449
CH-20235-SS	235-USS	HH 550-2S	CL-550-HTC-S	-
CH-20236	235-UB	HH 551-BN	-	-
CH-36204	604	FM 150	CL-250-TPC	94318
CH-36224	624	FM 250	CL-350-TPC	94334
CH-36202	602	FM 50	CL-150-TPC	94300
CH-301-A	601	SL 10	CL-50-SPC	-
CH-36003	603	SL 105-2	-	-
CH-36092	609	SL 110	-	-
CH-301-B	601-O	SL 15-2	CL-51-SPC	-
CH-302-F	605	SL 150	CL-150-SPC	-
CH-36010	610	SL 250	CL-250-SPC	-
CH-36012	618	SL 251-B	-	-
CH-30607	607	SL 310	-	-
CH-36330	630	SL 350	CL-350-SPC	-
CH-40323-SS	323-MSS	FA 100-2S	CL-100-PA-S	-
CH-40324	324	FA 130	CL-110-PA	-
CH-431	331	FA 200	CL-200-PA	-
CH-431-SS	331-SS	FA 200-2S	CL-200-PA-S	-
CH-40334	334	FA 230	CL-210-PA	-
CH-40341	341	FA 300	CL-300-PA	-
CH-40341-SS	341-SS	FA 300-2S	CL-300-PA-S	-
CH-40344	344	FA 330	CL-310-PA	-
CH-40370	375	FA 600	CL-400-PA	-
CH-40380	385	FA 700	CL-500-PA	93856
CH-43101	301	PA 150	CL-150-PA	-
CH-451	351	PA 250	CL-250-PA	94540
CH-451-SS	351-SS	PA 250-2S	CL-250-PA-S	-
CH-452	351-B	PA 251-B	CL-251-PA	94680
CH-452-SS	351-BSS	PA 251-B2S	-	-
CH-40371	371	PA 270	-	-
CH-43810	381	PA 350	CL-350-PA	-
CH-50350	424	SA 150	CL-50-PL	
CH-80325	325	SA 2	CL-325-PL-S	-
CH-50360	441	SA 250	CL-150-PL	-
CH-50380	462	SA 450	CL-254-PL	-
CH-50450	463	SA 550	CL-454-PL	-

NO · 6, JINLONG NORTH ROAD, SANGYUAN INDUSTRIAL PARK, DONGCHENG DISTRICT, DONGGUAN CITY, GUANGDONG PROVINCE ,CHINA.

CLAMPTEK ENTERPRISE CO.,LTD.(TAIWAN)

TEL: (86)-769-85833142 / 85833143 / 38937833

FAX: (86)-769-85833141 PC:523119

E-mail: marketing@clamptek.com

http: //www.clamptek.com